SHIMADZU
Excellence in Science

YP15 Series

Aluminum body

C621-E003A

◆Model number

YP15 S 11 A 2 H 1 - L XXX

❶ ❷ ❸ ❹ ❺ ❻ ❼ ❽ ❾

❶ Series number
YP15 series
❷ Mounting spigot diameter
S : $\phi 82^{-0.035}_{-0.090}$
A : $\phi 82.55^{0}_{-0.05}$
❸ Size
❹ Position of ports
A : side ports
D : rear ports
❺ Port configuration
2 : G screw thread
❻ Mounting
H : horizontal 2 bolts
❼ Shaft end
1 : SAE Spline 9 teeth
❽ Rotation viewing from shaft end
L = counterclockwise
R = clockwise
❾ Code number in 3 figures

◆Specifications

Size	Displacement		Rated pressure			Max. peak pressure			Speed min^{-1}		Inlet pressure	Mass	
	cm^3	in^3	MPa	bar	psi	MPa	bar	psi	MIN.	MAX.		kg	lb
5	5.10	0.311	20.6	206	2987	22.6	226	3277	500	4000	bar -0.20~ 1.0 MPa -0.02~ 0.1 psi -2.9 ~14.5	1.8	3.96
7	7.00	0.427										1.8	3.96
8	8.02	0.489										1.9	4.18
9.5	9.50	0.580										1.9	4.18
11	11.0	0.669										2.2	4.84
12	12.0	0.733										2.3	5.06
14	13.9	0.848	17.2	172	2494	20.6	206	2987		3500		2.3	5.06
16	15.9	0.970	15.7	157	2277	17.2	172	2494		3100		2.3	5.06

◆Typical assembly

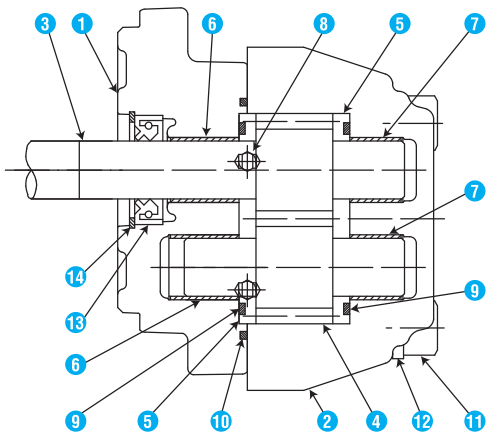

Item No.	Name	QTY	Material
❶	Front cover	1	Aluminum alloy
❷	Body	1	Aluminum alloy
❸	Drive gear	1	Alloy steel
❹	Driven gear	1	Alloy steel
❺	Side plate	2	Special alloy steel
❻	Bush	2	Special alloy steel
❼	Bush	2	Special alloy steel
❽	Steel ball	2	Alloy steel
❾	Gasket	2	Nitrile rubber
❿	Gasket	1	Nitrile rubber
⓫	Bolt	4	Alloy steel
⓬	Washer	4	Carbon steel
⓭	Oil seal	1	Nitrile rubber
⓮	Retainer ring	1	Carbon steel

NOTES : “QTY” shows the amount per one

SHIMADZU
Excellence in Science

YP15 Series Aluminum body

◆Outline dimensions

dimensions in mm

YP15 S/A □A2H□-L (Side ports)

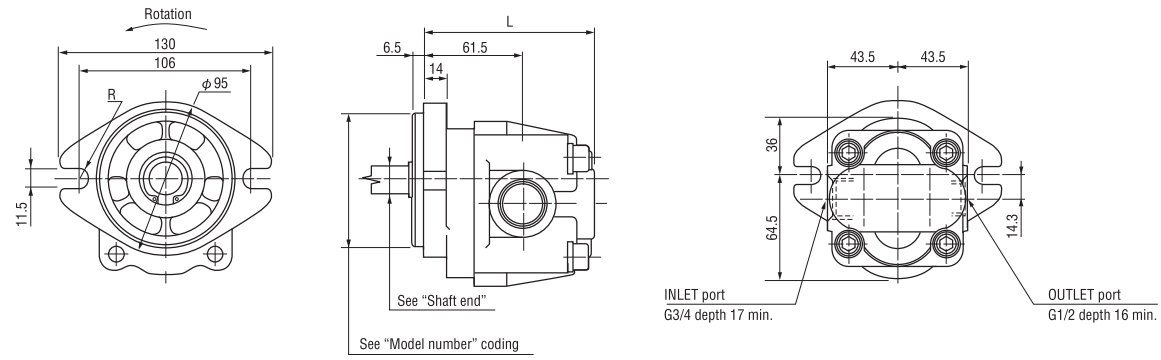

YP15 S/A □D2H□-L (Rear ports)

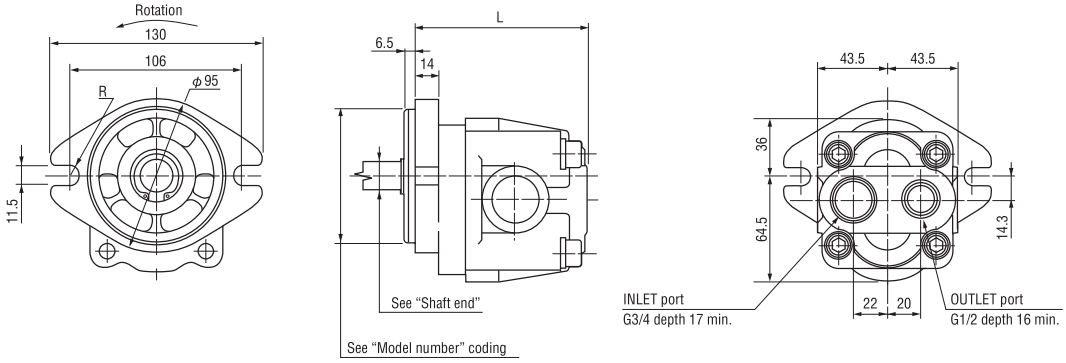

NOTE 1. Figure shown indicated counterclockwise rotation "L" viewing from shaft end. Clockwise rotation "R" is mirror image of this.
2. Unless otherwise specified, tolerance on dimension are ±1.0 mm.

Size	L
5	87.2
7	
8	
9.5	
11	104.5
12	
14	
16	

●Shaft end

SAE Spline (Some dimensions are different form SAE standard.) 9 teeth

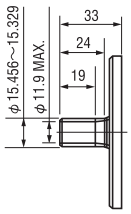

No. of teeth : 9
D.P. : 16/32
Pressure angle : 30°
Over pin dia. : 18.427~18.358
Pin dia. : ϕ3.048

SHIMADZU
Excellence in Science

YP15 Series Performance curves

OIL: ISO VG32 Hydraulic Fluid at 40°C

YP15-5

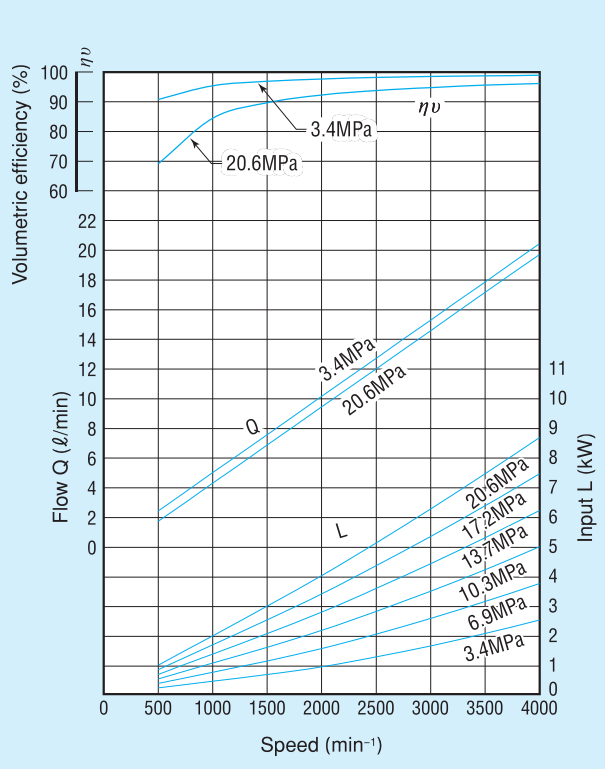

YP15-7

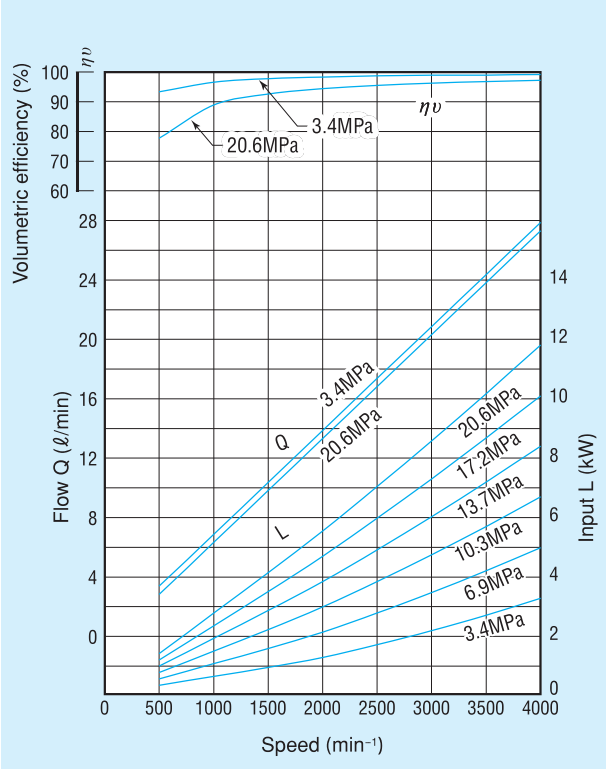

YP15-8

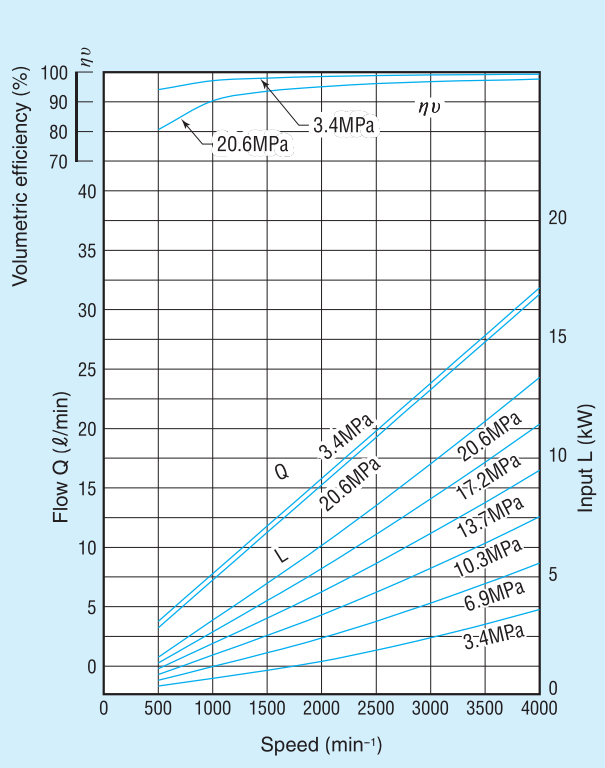

YP15-9.5

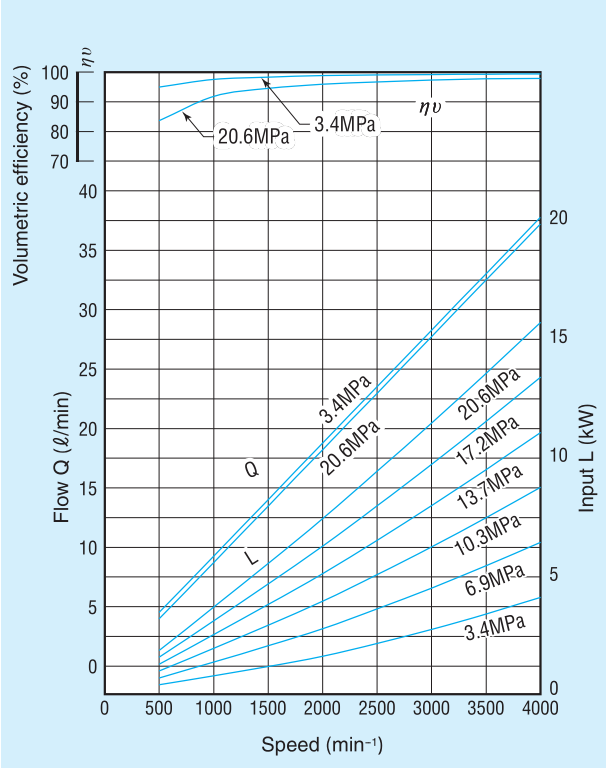

YP15 Series Performance curves

OIL: ISO VG32 Hydraulic Fluid at 40°C

YP15-11

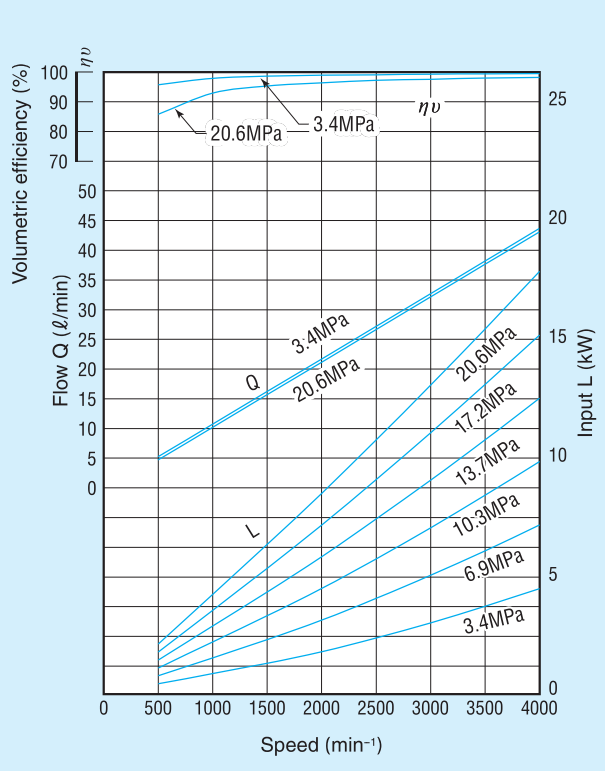

YP15-12

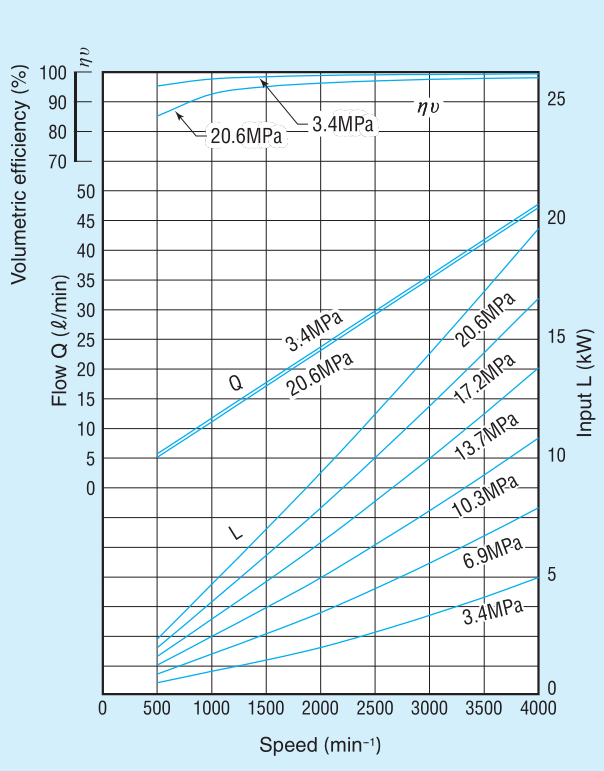

YP15-14

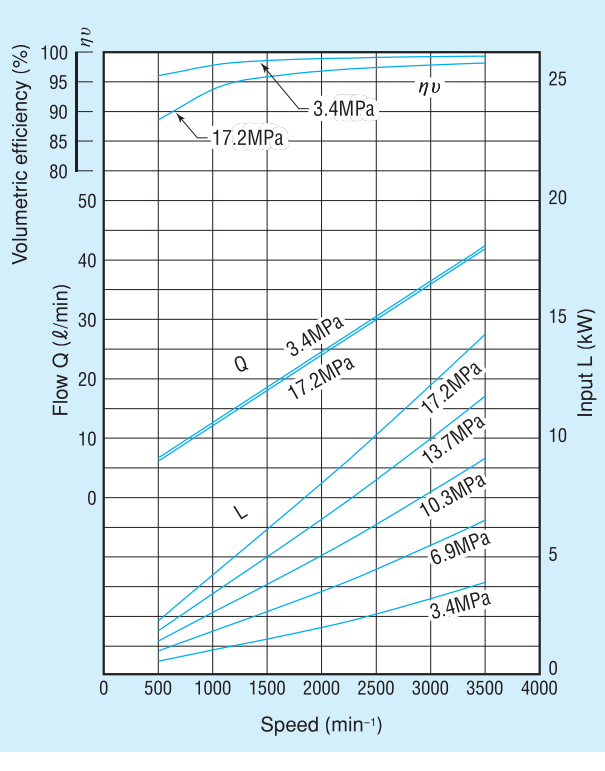

YP15-16

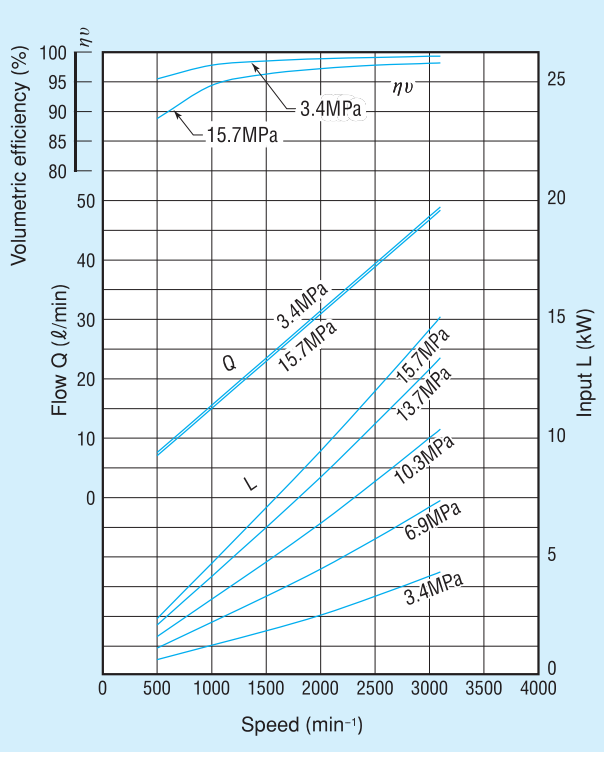

The appearances and specifications are subject to change for reasons of improvement without notice.