75600-SD

FINN ROTOR

SPAREPART DRAWINGS CRV 607 AND 608 MECHANICAL CONTROLS

SHOCK VALVES SPAREPART CODE	SPAREPART NAME
S100011-CRV0	SHOCK VALVE CRV 160-199 MAINR (SP)
S100011-CRV1	SHOCK VALVE CRV 50-89 (SP)
S100011-CRV2	SHOCK VALVE CRV 90-129 (SP)
S100011-CRV3	SHOCK VALVE CRV 130-159 (SP)
S100011-CRV4	SHOCK VALVE CRV 160-199 (SP)
S100011-CRV5	SHOCK VALVE CRV 200-300 (SP)
S100011-CRV-SK	SHOCK VALVE SEAL KIT

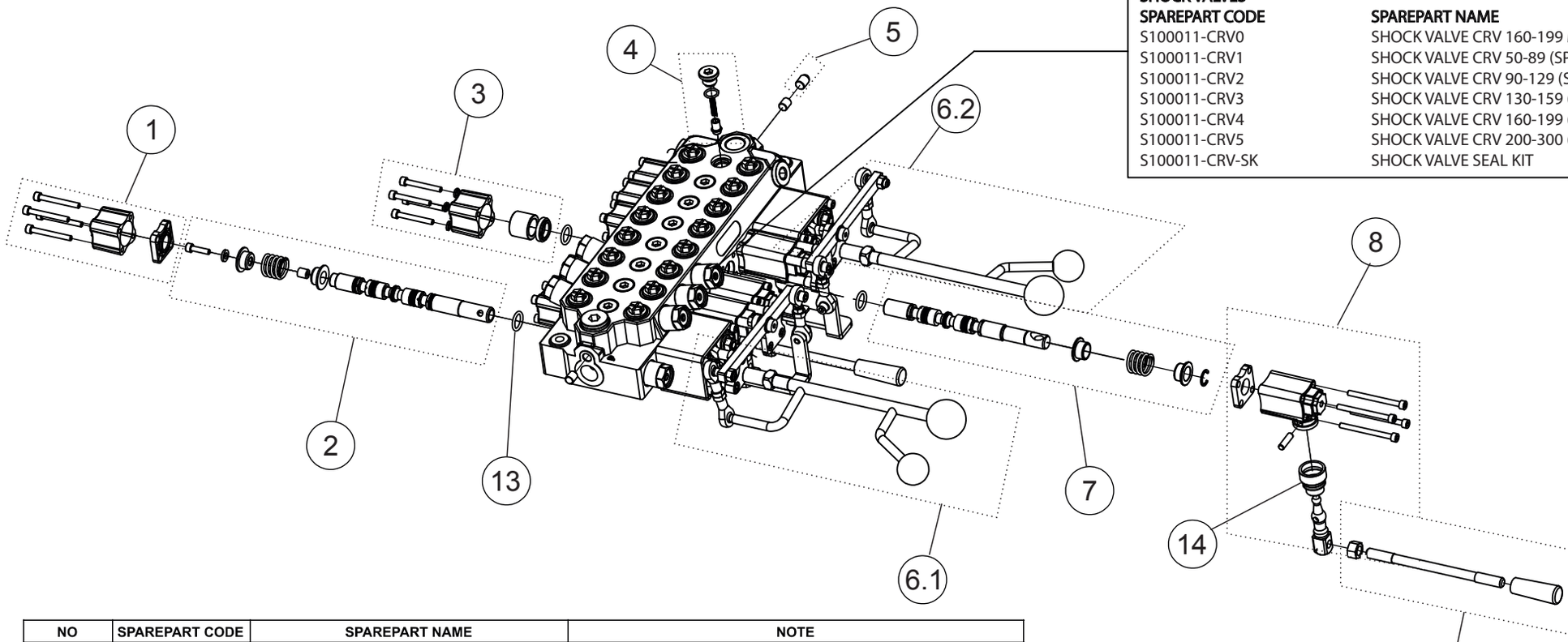

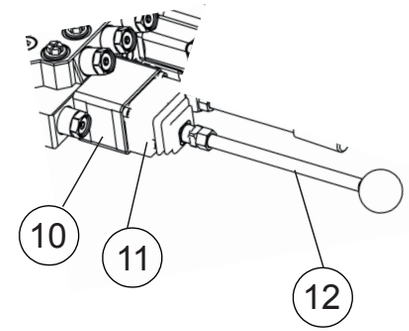

NO	SPAREPART CODE	SPAREPART NAME	NOTE
1	S75600-EC2	CRV 60 END CUP L CONTROL	
2	S75600-SA2	CRV 60 SPOOL ASSEMBLY 2L CONTROL	
3	S75600-EC	CRV 60 END CUP SINGLE LEVER	
4	S75600-BV	CRV 60 BACK FLASH VALVE	
5	S75600-B11	CRV 60 BODY END PLUG	
6.1	S75600-3KL	CRV 60 CONTROL LEVER 2L3K LEFT KIT	INCLUDE JOINT SET
6.2	S75600-3KR	CRV 60 CONTROL LEVER 2L3K RIGHT KIT	INCLUDE JOINT SET
7	S75600-SA1	CRV 60 SPOOL ASSEMBLY SINGLE CONTROL	
8	S75600-LC	CRV 60 SINGLE LEVER CONTROL SET	
9	S75600-L1	CRV 60 CONTROL LEVER M12x175	
10	S75600-2L	CRV 60 2-LEVER CONTROL SET	
11	S75600-22	CRV 60 2-LEVER RUBBER	
12	S75600-21	CRV 60 2L CONTROL LEVER	
13	S75600-SK	CRV 60 SEAL KIT	ALL SEALS
14	S75600-L3	CRV 60 SINGLE LEVER RUBBER	

www.finn-rotor.com

By: JIM 16/02/2022
Check: TU 16/02/2022
Accepted: JIM 17/02/2022

FINN ROTOR