STANDARD MANIFOLDS

VP0000XX

WITH OVERRIDE SCREW

ATLANTIC Fluid Tech

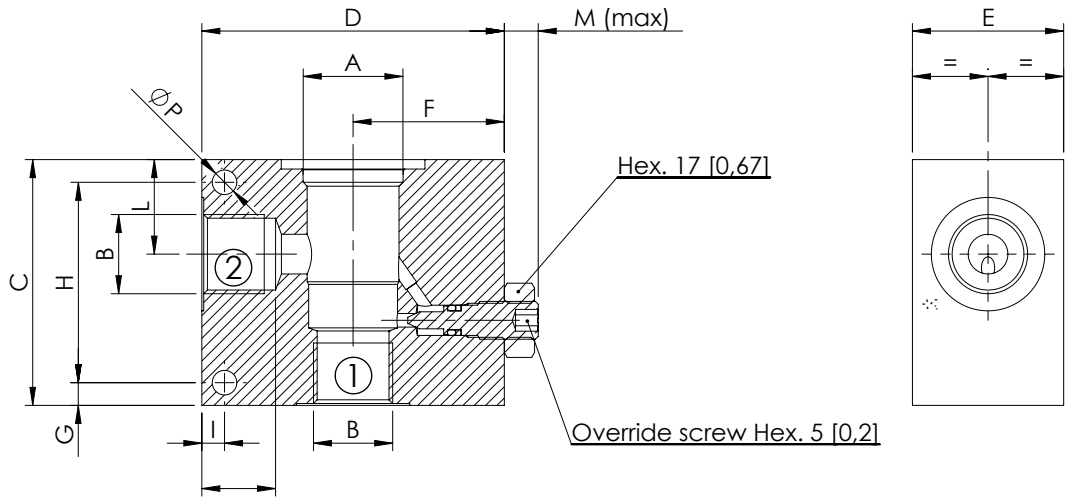

CAVITY	DIMENSIONS: mm (inches)												QUICK CODE	
A	B	C	D	E	F	G	H	I	L	M	N	P	Steel	Aluminium
VP000057	G 1/2"	65 (2,56)	80 (3,15)	40 (1,57)	40 (1,57)	6 (0,24)	53 (2,09)	6 (0,24)	25 (0,98)	9 (0,35)		6,5 (0,26)	KS000007	KS000001
	G 3/4"	65 (2,56)	80 (3,15)	40 (1,57)	40 (1,57)	6 (0,24)	53 (2,09)	6 (0,24)	25 (0,98)	9 (0,35)		6,5 (0,26)	KS000010	KS000004
VP000013	G 3/4"	80 (3,15)	90 (3,54)	50 (1,96)	47 (1,85)	7,5 (0,30)	65 (2,56)	7,5 (0,30)	31 (1,22)	9 (0,35)		8,5 (0,33)	KS000012	KS000005
	G 1"	80 (3,15)	90 (3,54)	50 (1,96)	47 (1,85)	7,5 (0,30)	65 (2,56)	7,5 (0,30)	31 (1,22)	9 (0,35)		8,5 (0,33)	KS000011	KS000006