Model:071 with JIC As fr.Ser.No 0710001

Chapter 4 Boom system

3595650

Load holding valve extension cyl. "finland" A

3595650 - Load holding valve extension cyl. "finland" A

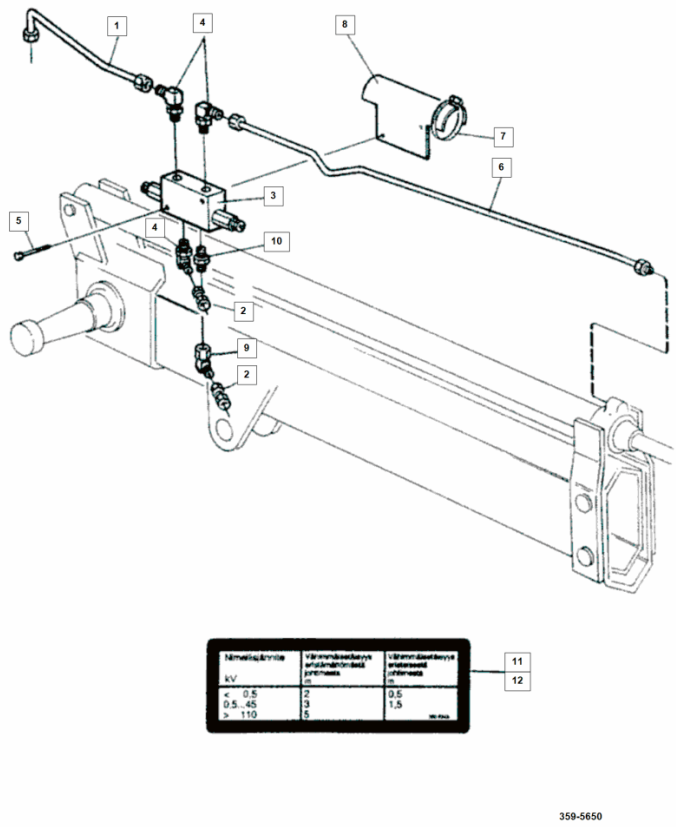

Pos	Part No	Description	Quantity
1	3598039	HYDRAULIC PIPE	1
2	9825142	NIPPLE	2
3	9809210	LOAD HOLDING VALVE	1
4	9985379	ANGLE COUPLING	3
5	9924078	SCREW	2
6	3598047	HYDRAULIC PIPE	1
7	9917799	HOSE CLAMP 68-85	2
8	3518507	FIXING PLATE	1
9	9988394	ANGLE COUPLING	1
10	9991662	NIPPLE 7/8-1/2	1
11	3505243	WARNING SIGN	1
12	9902813	POP RIVET	4