RE 92701/2026-03-02
Replaces: 2025-10-01

rexroth
A Bosch Company

Axial piston variable pump A10VO series 31

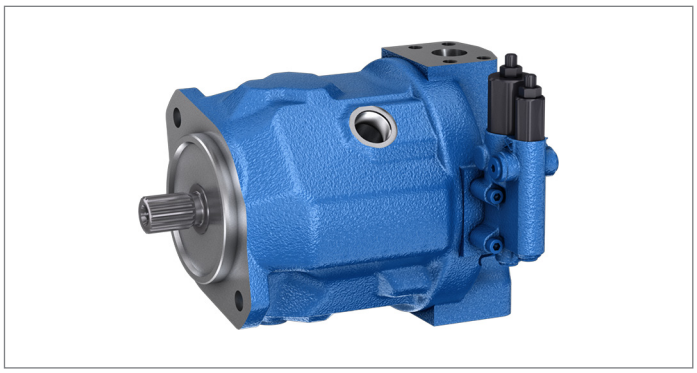

- All-purpose medium pressure pump
- Sizes 18 to 100
  Size 140 (see data sheet 92705)
- Nominal pressure 280 bar (4100 psi)
- Maximum pressure 350 bar (5100 psi)
- Open circuit

Features

- Variable pump with axial piston rotary group in swashplate design for hydrostatic drives in open circuit.
- Flow is proportional to drive speed and displacement.
- The flow can be smoothly changed by adjusting the swashplate.
- 2 drain ports
- Excellent suction characteristics
- Low noise level
- Long service life
- Good power to weight ratio
- Versatile controller range
- Short control time
- The through drive is suitable for adding gear pumps and axial piston pumps up to the same size, i.e., 100% through drive.

Contents

Type code	2
Hydraulic fluids	4
Working pressure range	6
Technical data, standard unit	8
Technical data, high-speed version	9
DG – Two-point control, direct operated	12
DR – Pressure controller	13
DRG – Pressure controller, remotely controlled	14
DFR / DFR1 / DRSC – Pressure flow controller	15
DFLR – Pressure, flow and power controller	17
ED – Electrohydraulic pressure control	18
ER – Electrohydraulic pressure control	20
EC4 – Electrohydraulic control valve (positive control)	22
Solenoid technical data	23
EB4 – Electrohydraulic control valve (negative control)	24
Dimensions, sizes 18 to 100	26
Dimensions, through drive	50
Overview of mounting options	53
Combination pumps A10VO + A10VO	54
Connector for solenoids	55
Swivel angle sensor	56
Installation instructions	57
Project planning notes	61
Safety instructions	62

Values in the US customary unit system are converted and rounded values. In case of doubt, only metric values are valid.

Type code

01	02	03	04	05		06	07		08	09	10	11	12	13
	A10V	**O**			**/**	**31**		**–**	**V**					

Version

		18	28	45	71	88	100	
01	Standard version (without code)	●	●	●	●	●	●	
	High-speed version (external dimensions are the same as the standard version)	–	–	●	●	–	●	**H**

Axial piston unit

02	Swashplate design, variable, nominal pressure 280 bar (4100 psi), maximum pressure 350 bar (5100 psi)	●	●	●	●	●	●	**A10V**

Operating mode

03	Pump, open circuit	**O**

Size (NG)

		18	28	45	71	88	100
04	Geometric displacement, see table of values on page 8 and 9	**18**	**28**	**45**	**71**	**88**	**100**

Control device

05	Two-point control, direct operated				●	●	●	●	●	●	**DG**
	Pressure controller	Hydraulic			●	●	●	●	●	●	**DR**
	With flow controller	Hydraulic	X-T open		●	●	●	●	●	●	**DFR**
			X-T plugged, with flushing function		●	●	●	●	●	●	**DFR1**
			X-T plugged without flushing function		●	●	●	●	●	●	**DRSC**
	With pressure cut-off	Hydraulic	Remote controlled		●	●	●	●	●	●	**DRG**
		Electric	Negative control	U = 12 V	●	●	●	●	●	●	**ED71**
				U = 24 V	●	●	●	●	●	●	**ED72**
		Electric	Positive control	U = 12 V	●	●	●	●	●	●	**ER71**[1]
				U = 24 V	●	●	●	●	●	●	**ER72**[1]
	Electro-hydraulic control valve		Positive control	U = 12 V to 24 V	–	●	●	●	●[4]	●[3]	**EC4**[2]
			Negative control		–	●	●	●	●[4]	●[3]	**EB4**[2]
	Pressure, flow and power controller				–	●	●	●	●	●	**DFLR**

Series

06	Series 3, index 1	**31**

Direction of rotation

07	Viewed on drive shaft	Clockwise	**R**
		Counter-clockwise	**L**

Sealing material

08	FKM (fluorocarbon rubber)	**V**

Drive shaft

			18	28	45	71	88	100	
09	Splined shaft ISO 3019-1 View in the data sheet has been standardized. For a detailed view, see the installation drawing.	Standard shaft	●	●	●	●	●	●	**S**
		Similar to shaft "S" however for higher torque	●	●	●	●	●	–	**R**
		Reduced diameter; limited suitability for through drive (see table of values, page 10)	●	●	●	●	●	●	**U**
		Same as "U", higher torque; limited suitability for through drive (see table of values, page 10); for mounting option, see page 53	–	●	●	●	●	●	**W**

1) Observe the project planning notes on page 21
2) The electro-hydraulic EC4/EB4 control valve is always equipped with a swivel angle sensor (see also page 22 and 56).
3) Only available with mounting flange "D" (not available for versions with mounting flange "C")
4) Further variant with series 32 features on request

01	02	03	04	05		06	07		08	09	10	11	12	13
	A10V	**O**			**/**	**31**		**–**	**V**					

Mounting flange

			18	28	45	71	88	100	
10	Based on ISO 3019-1 (SAE)	2-hole	●	●	●	●	●[5]	●	**C**
		2/4-hole	–	–	–	–	–	●	**D**

Working port

				18	28	45	71	88	100	
11	SAE flange connections according to ISO 6162, working ports **metric**	Fastening thread **metric**; rear	Not for through drive	–	●	●	–	–	●	**11**
				–	–	–	●	●	–	**41**
		Fastening thread **metric**; lateral top bottom	For through drive	●	●	●	–	–	●	**12**
				–	–	–	●	●	–	**42**
	SAE flange connections according to ISO 6162, working ports **UNC**	Fastening thread **UNC**; rear	Not for through drive	–	●	●	–	–	●	**61**
				–	–	–	●	●	–	**91**
		Fastening thread **UNC**; lateral top bottom	For through drive	●	●	●	–	–	●	**62**
				–	–	–	●	●	–	**92**

Through drive (for mounting options, see page 53)

	For flange ISO 3019-1		Hub for splined shaft[6]								
12	Diameter	Mounting[7]	Diameter		18	28	45	71	88	100	
	Without through drive				●	●	●	●	●	●	**N00**
	82-2 (A)		5/8 in	9T 16/32DP	●	●	●	●	●	●	**K01**
			3/4 in	11T 16/32DP	●	●	●	●	●	●	**K52**
	101-2 (B)		7/8 in	13T 16/32DP	–	●	●	●	●	●	**K68**
			1 in	15T 16/32DP	–	–	●	●	●	●	**K04**
	127-2 (C)		1 1/4 in	14T 12/24DP	–	–	–	●	●	●	**K07**
			1 1/2 in	17T 12/24DP	–	–	–	–	–	●	**K24**

Connector for solenoids[8]

		18	28	45	71	88	100	
13	Without connector (without solenoid, only for hydraulic controls, without code)	●	●	●	●	●	●	
	DEUTSCH - molded connector, 2-pin, without suppressor diode	●	●	●	●	●	●	**P**

Swivel angle sensor

				18	28	45	71	88	100	
14	Without swivel angle sensor (without code)			●	●	●	●	●	●	
	With electric swivel angle sensor PAL (as per data sheet 95161)	Ratiometric	Power supply U = 5V DC	–	●	●	●	●	●[9]	**H**
		SENT/SENT		–	–	–	○	○	○	**P**

● = Available ○ = On request – = Not available

Notice

- Observe the project planning notes on page 61 and the project planning notes regarding each control device.
- In addition to the type code, please specify the relevant technical data when placing your order.

5) Further variant with series 32 features on request
6) Hub for splined shaft according to ANSI B92.1a (drive shaft allocation according to ISO 3019-1)
7) Mounting holes pattern viewed from through drive with control at top.
8) Connectors for other electric components can deviate.
9) Only available with mounting flange "D" (not available for versions with mounting flange "C")

Hydraulic fluids

The A10V(S)O variable pump is designed for operation with HLP mineral oil according to DIN 51524.
See the following data sheets for application instructions and requirements for hydraulic fluids before the start of project planning:

- 90220: Hydraulic fluids based on mineral oils and related hydrocarbons
- 90221: Environmentally acceptable hydraulic fluids
- 90222: HFD hydraulic fluids (for permissible technical data, see data sheet 90225)

Selection of hydraulic fluid
Bosch Rexroth evaluates hydraulic fluids on the basis of the Fluid Rating according to the technical data sheet 90235. Hydraulic fluids with positive evaluation in the Fluid Rating are listed in the following data sheet:

- 90245: Bosch Rexroth Fluid Rating List for Rexroth hydraulic components (pumps and motors)

Selection of hydraulic fluid shall make sure that the operating viscosity in the operating temperature range is within the optimum range (ν_{opt}; see selection diagram).

Notice
The axial piston unit is not suitable for operation with water-free HF hydraulic fluids / HF hydraulic fluids containing water / HFx hydraulic fluids.

Viscosity and temperature of hydraulic fluids

	Viscosity	Shaft seal	Temperature[2]	Comment
Cold start	ν_{max} ≤ 1600 mm²/s (cSt)	FKM	ϑ_{St} ≥ −25 °C (-13 °F)	t ≤ 1 min, without load (p ≤ 30 bar (435 psi), n ≤ 1000 min⁻¹ (rpm). Permissible temperature difference between axial piston unit and hydraulic fluid in the system maximum 25 K (45 °F)
Warm-up phase	ν = 1600 ... 400 mm²/s (cSt)			t ≤ 15 min, p ≤ 0.7 × p_{nom} und n ≤ 0.5 × n_{nom}
Permissible operating range	ν = 400 ... 10 mm²/s (cSt)[1]	FKM	ϑ ≤ +110 °C (230 °F)	Measured at port **L**, **L₁**
	ν_{opt} = 36 ... 16 mm²/s (cSt)			Optimal operating viscosity and efficiency range
Short-term operation	ν_{min} = 10 ... 7 mm²/s (cSt)	FKM	ϑ ≤ +110 °C (230 °F)	t ≤ 1 min, p ≤ 0.3 × p_{nom}, measured at port **L**, **L₁**

▼ **Selection diagram**

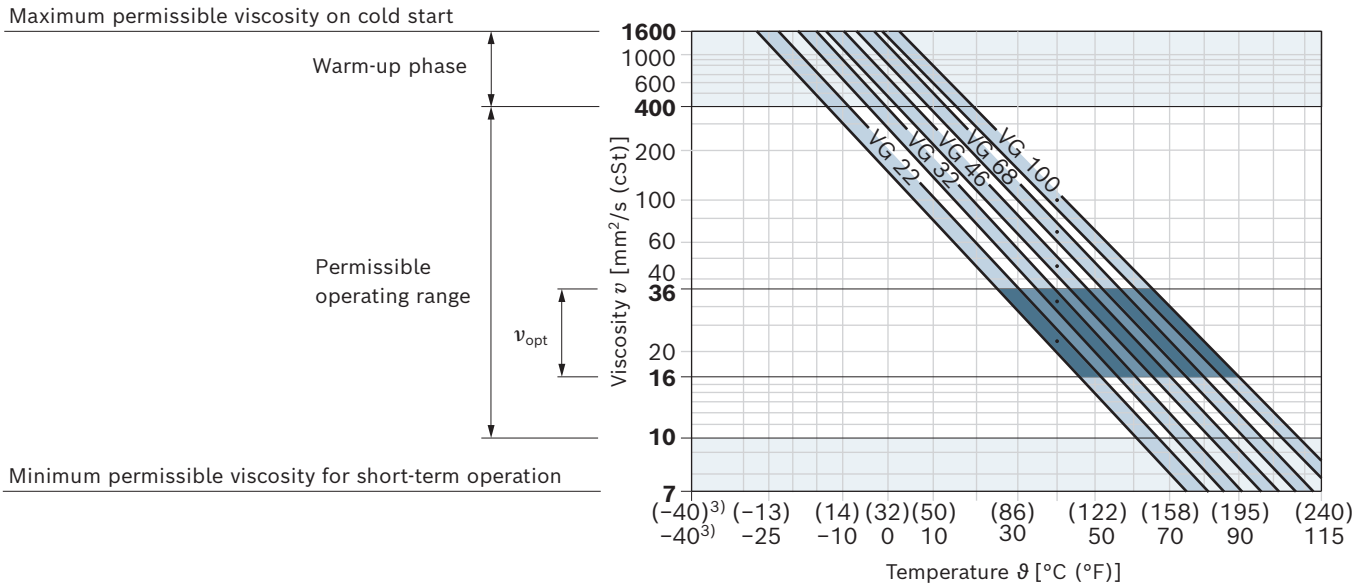

1) This corresponds, e.g. on the VG 46, to a temperature range of +4 °C to +85 °C (+39 °F to +185 °F) (see selection diagram)

2) If the temperature at extreme operating parameters cannot be adhered to, please contact us.

3) For applications in the low-temperature range, please contact us.

Filtration of the hydraulic fluid

Finer filtration improves the cleanliness level of the hydraulic fluid, which increases the service life of the axial piston unit.
A cleanliness level of at least 20/18/15 is to be maintained according to ISO 4406
At a hydraulic fluid viscosity of less than 10 mm^2/s (cSt) (e.g. due to high temperatures during short-term operation) at the drain port, a cleanliness level of at least 19/17/14 acc. to ISO 4406 is required.

Examples of temperatures of hydraulic fluids at a viscosity of 10 mm^2/s (cSt):

- 73 °C (163 °F) at HLP 32
- 85 °C (185 °F) at HLP 46

Working pressure range

Pressure at working port B		**Definition**
Nominal pressure p_{nom}	280 bar (4100 psi)	The nominal pressure corresponds to the maximum design pressure.
Maximum pressure p_{max}	350 bar (5100 psi)	The maximum pressure corresponds to the maximum working pressure within a single operating period. The sum of single operating periods must not exceed the total operating period.
Single operating period	2 ms	
Total operating period	300 h	
Minimum pressure $p_{B\ absolute}$ (high-pressure side)	10 bar (145 psi)[1]	Minimum pressure on the high-pressure side (**B**) which is required in order to prevent damage to the axial piston unit.
Rate of pressure change $R_{A\ max}$	16000 bar/s (232060 psi/s)	Maximum permissible speed of pressure build-up and reduction during a pressure change across the entire pressure range.
Pressure at suction port S (inlet)		
Minimum pressure $p_{S\ min}$ Standard	0.8 bar (12 psi) absolute	Minimum pressure at suction port **S** (inlet) which is required to prevent damage to the axial piston unit. The minimum pressure depends on the rotational speed and displacement of the axial piston unit.
Maximum pressure $p_{S\ max}$	10 bar (145 psi) absolute[2]	
Case pressure at port L, L_1		
Maximum pressure $p_{L\ max}$	2 bar (30 psi) absolute[2]	Maximum 0.5 bar (7.5 psi) higher than inlet pressure at port **S**, but not higher than $p_{L\ max}$. The case pressure must always be higher than the ambient pressure. A drain line to the reservoir is required.
Pilot pressure port X with external high pressure		
Maximum pressure p_{max}	350 bar (5100 psi)	For the design of all control lines pressurized with external high pressure, the values for the rate of pressure change, maximum single operating period and total operating period applicable to port **B** must not be exceeded.

▼ **Rate of pressure change $R_{A\ max}$**

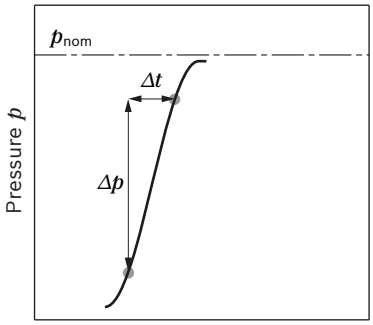

Notice

- ▶ Working pressure range applies when using hydraulic fluids based on mineral oils. Please contact us for values for other hydraulic fluids.
- ▶ In addition to the hydraulic fluid and the temperature, the service life of the shaft seal is influenced by the rotational speed of the axial piston unit and the case pressure.

▼ **Pressure definition**

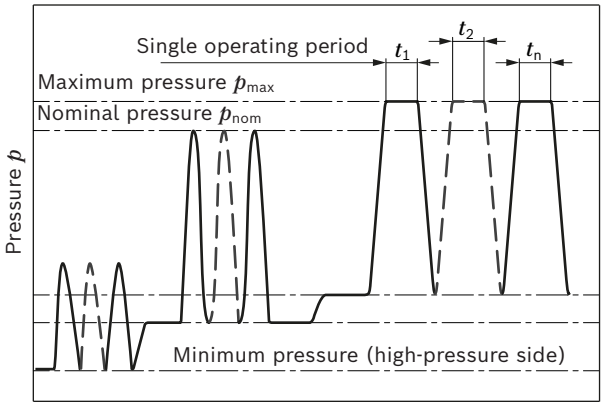

Total operating period = $t_1 + t_2 + ... + t_n$

1) Lower pressure is time-dependent, please contact us
2) Other values on request

Minimum permissible inlet pressure at suction port S with speed increase

In order to prevent damage to the pump (cavitation), a minimum inlet pressure must be ensured at the suction port **S**. The level of the minimum input pressure depends on the rotational speed and the displacement volume of the variable pump.

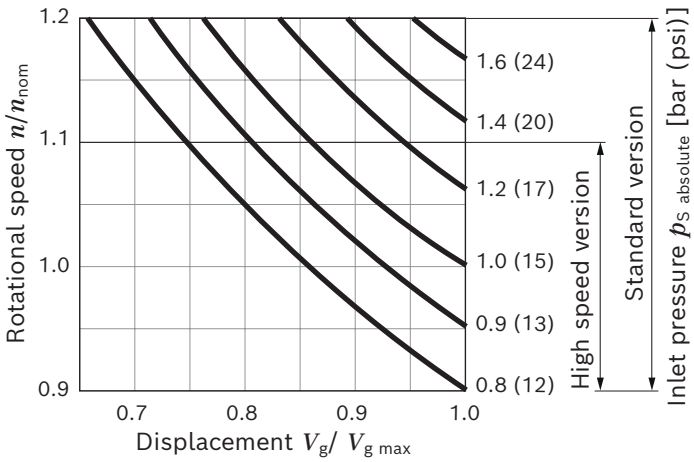

During continuous operation in overspeed over n_{nom}, a reduction in operational service life is to be expected due to cavitation erosion.

Technical data, standard unit

Size		NG		18	28	45	71	88	100
Geometric displacement, per revolution		$V_{g\,max}$	cm^3	18	28	45	71	88	100
			$inch^3$	1.10	1.71	2.75	4.33	5.37	6.10
Maximum rotational speed[1]	at $V_{g\,max}$	n_{nom}	rpm	3300	3000	2600	2200	2100	2000
	at $V_g < V_{g\,max}$[2]	$n_{max\,perm}$	rpm	3900	3600	3100	2600	2500	2400
Flow	at n_{nom} and $V_{g\,max}$	$q_{v\,max}$	l/min	59	84	117	156	185	200
			gpm	15.6	22	30.9	41.2	8.9	52.8
Power	at n_{nom}, $V_{g\,max}$ and Δp = 280 bar (4100 psi)	P_{max}	kW	28	39	55	73	86	93
			HP	38	52	74	98	115	125
Torque at $V_{g\,max}$ and	Δp = 280 bar (4100 psi)	M_{max}	Nm	80	125	200	316	392	445
			lb-ft	59	92	148	233	289	328
	Δp = 100 bar (1450 psi)	M	Nm	30	45	72	113	140	159
			lb-ft	22	33	53	83	103	117
Rotary stiffness Drive shaft	S	c	Nm/rad	11087	22317	37500	71884	71884	121142
			lb-ft/rad	8177	16460	27659	53019	53019	89350
	R	c	Nm/rad	14850	26360	41025	76545	76545	–
			lb-ft/rad	10953	19442	30258	56457	56457	–
	U	c	Nm/rad	8090	16695	30077	52779	52779	91093
			lb-ft/rad	5967	12314	22184	38928	38928	67187
	W	c	Nm/rad	–	19898	34463	57460	57460	101847
			lb-ft/rad	–	14676	25419	42380	42380	75118
Moment of inertia of the rotary group		J_{TW}	kgm^2	0.00093	0.0017	0.0033	0.0083	0.0083	0.0167
			$lbs\text{-}ft^2$	0.022	0.040	0.078	0.197	0.197	0.396
Maximum angular acceleration[3]		α	rad/s^2	6800	5500	4000	2900	2600	2400
Case volume		V	l	0.4	0.7	1.0	1.6	1.6	2.2
			gal	0.106	0.185	0.264	0.420	0.420	0.580
Weight **without** through drive (approx.)		m	kg	12.9	18	23.5	35.2	35.2	49.5
			lbs	28	40	52	78	78	109
Weight **with** through drive (approx.)			kg	14	19.3	25.1	38	38	55.4
			lbs	31	43	55	84	84	122

Notice

- Theoretical values, without efficiency and tolerances; values rounded
- Operation above the maximum values or below the minimum values may result in a loss of function, a reduced service life or in the destruction of the axial piston unit. Bosch Rexroth recommends checking the loading by means of test or calculation / simulation and comparison with the permissible values.

For formulas to determine the characteristics, see page 9

1) The values are applicable:
– at absolute pressure p_{abs} = 1 bar (15 psi) at suction port **S**
– for the optimum viscosity range from v_{opt} = 36 to 16 mm^2/s (cSt)
– with hydraulic fluid based on mineral oils

2) For a speed increase up to $n_{max\,perm}$, please observe the diagram on page 7.

3) The data are valid for values between the minimum required and maximum permissible rotational speed. It applies for external stimuli (e.g. diesel engine 2 to 8 times rotary frequency, cardan shaft twice the rotary frequency). The limit value is only valid for a single pump. The load capacity of the connection parts must be considered.

Technical data, high-speed version

Size		NG		45	71	100
Geometric displacement, per revolution		$V_{g\,max}$	cm³	45	71	100
			inch³	2.75	4.33	6.10
Maximum rotational speed[1]	at $V_{g\,max}$	n_{nom}	rpm	3000	2550	2300
	at $V_g < V_{g\,max}$[2]	$n_{max\,perm}$	rpm	3300	2800	2500
Flow	at n_{nom} and $V_{g\,max}$	$q_{v\,max}$	l/min	135	178	230
			gmp	35.7	47	60.8
Power	at n_{nom}, $V_{g\,max}$ and	P_{max}	kW	63	83	107
	Δp = 280 bar (4100 psi)		HP	84	111	143
Torque at $V_{g\,max}$ and	Δp = 280 bar (4100 psi)	M_{max}	Nm	200	316	445
			lb-ft	148	233	328
	Δp = 100 bar (1450 psi)	M	Nm	72	113	159
			lb-ft	53	83	117
Rotary stiffness of drive shaft	S	c	Nm/rad	37500	71884	121142
			lb-ft/rad	27659	53019	89350
	R	c	Nm/rad	41025	76545	–
			lb-ft/rad	30258	56457	–
	U	c	Nm/rad	30077	52779	91093
			lb-ft/rad	22184	38928	67187
	W	c	Nm/rad	34463	57460	101847
			lb-ft/rad	25419	42380	75118
Moment of inertia of the rotary group		J_{TW}	kgm²	0.0033	0.0083	0.0167
			lb-ft²	0.078	0.107	0.396
Maximum angular acceleration[3]		α	rad/s²	4000	2900	2400
Case volume		V	l	1.0	1.6	2.2
			gal	0.264	0.420	0.580
Weight **without** through drive (approx.)		m	kg	23.5	35.2	49.5
			lbs	52	78	109
Weight **with** through drive (approx.)			kg	25.1	38	55.4
			lbs	55	84	122

Determination of the characteristics		
Flow	$q_v = \frac{V_g \times n \times \eta_v}{1000\ (231)}$	[l/min (gpm)]
Torque	$M = \frac{V_g \times \Delta p}{20\ (24) \times \pi \times \eta_{mh}}$	[Nm (lb-ft)]
Power	$P = \frac{2\,\pi \times M \times n}{60000\ (33000)} = \frac{q_v \times \Delta p}{600\ (1714) \times \eta_t}$	[kW (HP)]

Key

V_g Displacement per revolution [cm³ (inch³)]

Δp Differential pressure [bar (psi)]

n Rotational speed [rpm]

η_v Volumetric efficiency

η_{hm} Hydraulic-mechanical efficiency

η_t Total efficiency ($\eta_t = \eta_v \times \eta_{hm}$)

Observe **notice** on page 8

1) The values are applicable:
– at absolute pressure p_{abs} = 1 bar (15 psi) at suction port **S**
– for the optimum viscosity range from ν_{opt} = 36 to 16 mm²/s (cSt)
– with hydraulic fluid based on mineral oils

2) For a speed increase up to $n_{max\,perm}$, please observe the diagram on page 7.

3) The data are valid for values between the minimum required and maximum permissible rotational speed. It applies for external stimuli (e.g. diesel engine 2 to 8 times rotary frequency, cardan shaft twice the rotary frequency). The limit value is only valid for a single pump. The load capacity of the connection parts must be considered.

Permissible radial and axial loading of the drive shaft

Size		NG		18	28	45	71	88	100
Maximum radial force at a/2	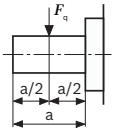	$F_{q\ max}$	N	350	1200	1500	1900	1900	2300
			lbf	79	270	337	427	427	517
Maximum axial force	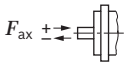	$\pm F_{ax\ max}$	N	700	1000	1500	2400	2400	4000
			lbf	157	225	337	540	540	899

Notice

- The values given are maximum values and do not apply to continuous operation. All loads of the drive shaft reduce the bearing service life!
- For drives with radial loading (pinion, V-belt), please contact us

Permissible input and through-drive torques

Size				18	28	45	71	88	100
Torque at $V_{g\,max}$ and Δp = 280 bar (4100 psi)[1]		M_{max}	Nm	80	125	200	316	392	445
			lb-ft	59	92	148	232	289	328
Maximum input torque on drive shaft[2]									
	S	$M_{E\,max}$	Nm	124	198	319	626	626	1104
			lb-ft	91	145	235	462	462	814
		Ø	inch	3/4	7/8	1	1 1/4	1 1/4	1 1/2
	R	$M_{E\,max}$	Nm	160	250	400	644	644	–
			lb-ft	118	184	295	475	475	–
		Ø	inch	3/4	7/8	1	1 1/4	1 1/4	–
	U	$M_{E\,max}$	Nm	59	105	188	300	300	595
			lb-ft	43	77	139	221	221	438
		Ø	inch	5/8	3/4	7/8	1	1	1 1/4
	W	$M_{E\,max}$	Nm	–	140	220	394	394	636
			lb-ft	–	103	162	291	291	469
		Ø	inch	–	3/4	7/8	1	1	1 1/4
Maximum through-drive torque									
	S	$M_{D\,max}$	Nm	108	160	319	492	492	778
			lb-ft	80	118	235	363	363	573
	R	$M_{D\,max}$	Nm	120	176	365	548	548	–
			lb-ft	89	130	269	404	404	–
	U	$M_{D\,max}$	Nm	59	105	188	300	300	595
			lb-ft	43	77	139	221	221	438
	W	$M_{D\,max}$	Nm	–	140	220	394	394	636
			lb-ft	–	103	162	291	291	469

1) Efficiency not considered
2) For drive shafts with no radial force

▼ **Distribution of torques**

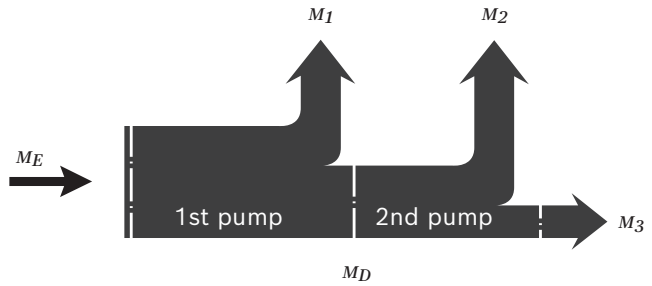

Torque at 1st pump	M_1		
Torque at 2nd pump	M_2		
Torque at 3rd Pump	M_3		
Input torque	M_E	=	$M_1 + M_2 + M_3$
	M_E	<	$M_{E\,max}$
Through-drive torque	M_D	=	$M_2 + M_3$
	M_D	<	$M_{D\,max}$

DG – Two-point control, direct operated

The variable pump can be set to a minimum swivel angle by connecting an external switching pressure to port **X.** This will supply control fluid directly to the stroking piston; a minimum control pressure of p_{St} ≥ 50 bar (725 psi) is required.
The variable pump is only switchable between $V_{g\ max}$ or $V_{g\ min}$.
Please note that the required switching pressure at port **X** is directly dependent on the actual working pressure p_B in port **B**. (See switching pressure characteristic curve).
The maximum permissible switching pressure is 280 bar (4100 psi).

Switching pressure p_{St} in **X** = 0 bar (0 psi) ≙ $V_{g\ max}$
Switching pressure p_{St} in **X** ≥ 50 bar (725 psi) ≙ $V_{g\ min}$

▼ **Switching pressure characteristic curve**

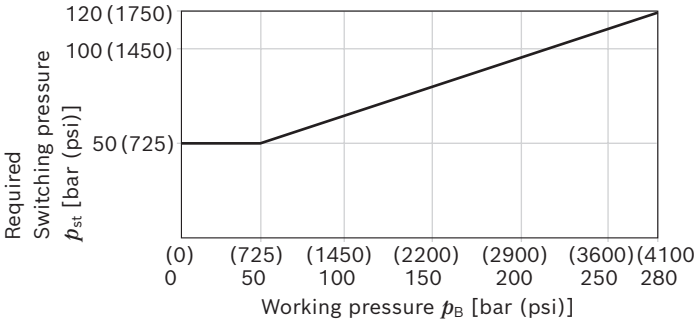

▼ **Circuit diagram DG**

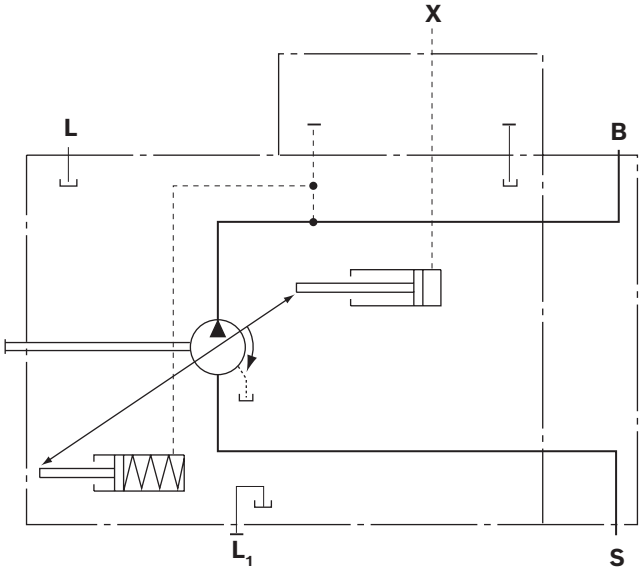

DR – Pressure controller

The pressure controller limits the maximum pressure at the pump outlet within the control range of the variable pump. The variable pump only supplies as much hydraulic fluid as is required by the consumers. If the working pressure exceeds the pressure command value at the pressure valve, the pump will regulate to a smaller displacement to reduce the control differential.

- Basic position in depressurized state: $V_{g\,max}$.
- Setting range[1] for infinitely variable 50 to 280 bar pressure control (725 to 4100 psi).
  Standard is 280 bar (4100 psi).

▼ **Characteristic curve**

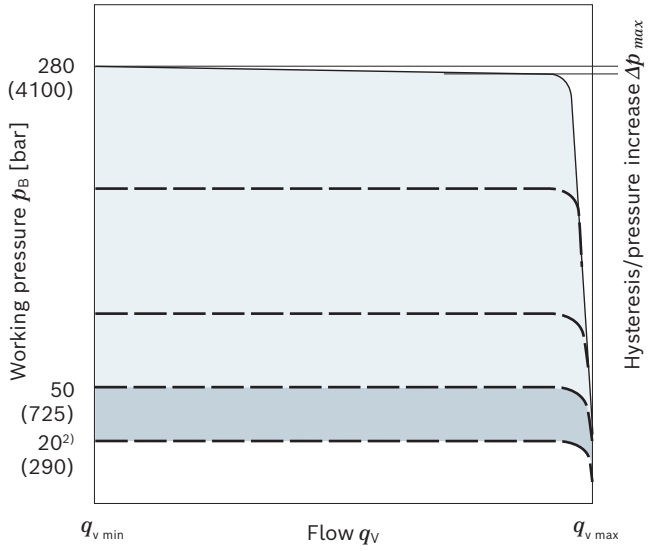

Characteristic curve valid at n_1 = 1500 rpm and ϑ_{fluid} = 50 °C (120 °F).

▼ **Circuit diagram DR**

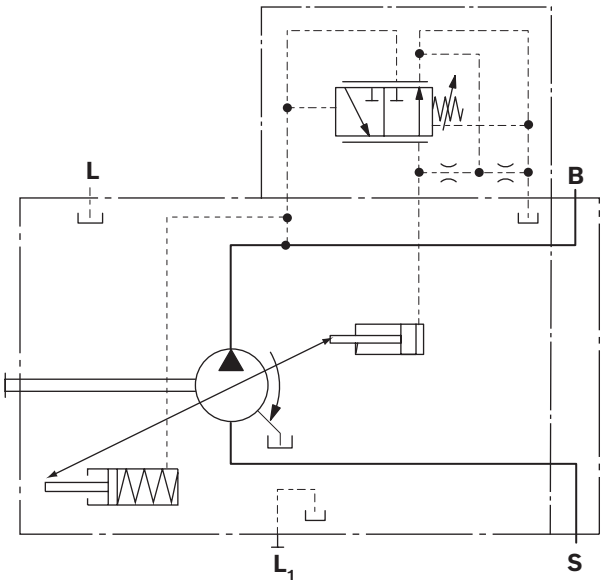

Controller data DR

NG		18	28	45	71	88	100
Pressure increase	Δp [bar (psi)]	4 (60)	4 (60)	6 (87)	8 (115)	9 (130)	10 (145)
Hysteresis	Δp [bar (psi)]	maximum 3 (45)					
Pilot fluid consumption	[l/min (gpm)]	maximum approx. 3 (0.8)					

1) In order to prevent damage to the pump and the system, the permissible setting range must not be exceeded. The range of possible settings at the valve is higher.
2) For settings below 50 bar (725 psi), please use the SO275 special pressure controller (setting range: 20 ti 100 bar (510 to 1450 psi)).

DRG – Pressure controller, remotely controlled

For the remote controlled pressure controller, the pressure limitation is performed using a separately arranged pressure relief valve. Therefore, any pressure control value under the pressure set on the pressure controller can be regulated. Pressure controller DR see page 13.
A pressure relief valve is externally piped up to port **X** for remote control. This relief valve is not included in the scope of delivery of the DRG control.
When there is differential pressure of 20 bar (290 psi) Δp (standard setting), the control fluid quantity at port **X** is approx. 1.5 l/min (0.4 gpm). If another setting is required (range from 14 to 22 bar (200 to 320 psi)) please state in plain text.
As a separate pressure relief valve (**1**) we recommend:

- A direct operated, hydraulic or electric proportional one, suitable for the control fluid quantity mentioned above.
  The maximum line length should not exceed 2 m (6.6 ft).
- Basic position in depressurized state: $V_{g\,max}$.
- Setting range[1] for pressure control 50 to 280 bar (725 to 4100 psi) (**3**).
  Standard is 280 bar (4100 psi).
- Setting range for differential pressure 14 to 22 bar (200 to 320 psi) (**2**)
  Standard is 20 bar (290 psi).

Unloading port **X** to the reservoir results in a zero stroke pressure (standby) which is approx. 1 to 2 bar (15 to 30 psi) higher than the defined differential pressure Δp, however system influences are not taken into account.

▼ **Characteristic curve DRG**

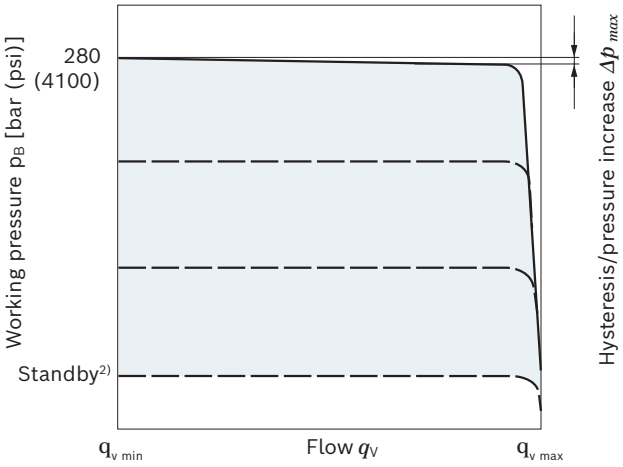

Characteristic curve valid at n_1 = 1500 rpm and ϑ_{fluid} = 50 °C (120 °F).

▼ **Circuit diagram DRG**

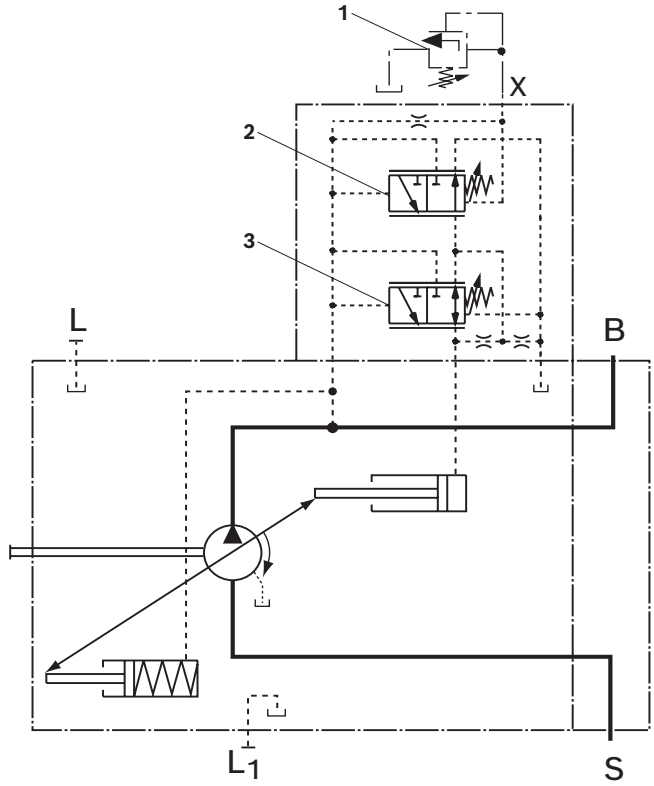

1 The separate pressure relief valve and the line are not included in the scope of delivery.
2 Remote controlled pressure cut-off (**G**).
3 Pressure controller (**DR**)

Controller data DRG

NG		18	28	45	71	88	100
Pressure increase	Δp [bar (psi)]	4 (60)	4 (60)	6 (87)	8 (115)	9 (130)	10 (145)
Hysteresis	Δp [bar (psi)]	maximum 4 (60)					
Pilot fluid consumption DR and DRG	[l/min (gpm)]	maximum approx. 4.5 (1.2)					

1) In order to prevent damage to the pump and the system, the permissible setting range must not be exceeded. The range of possible settings at the valve is higher.
2) Zero stroke pressure from pressure setting Δp on controller (**2**)

DFR / DFR1 / DRSC – Pressure flow controller

In addition to the pressure controller function (see page 13), an adjustable orifice (e.g. directional valve) is used to adjust the differential pressure upstream and downstream of the orifice. This is used to control the pump flow. The pump flow is equal to the actual hydraulic fluid quantity required by the consumer. With all controller combinations, the V_g reduction has priority.

- Basic position in depressurized state: $V_{g\,max}$.
- Setting range[1] to 280 bar (4100 psi).
  Standard is 280 bar (4100 psi)
- DR pressure controller data see page 13

▼ **Characteristic curve**

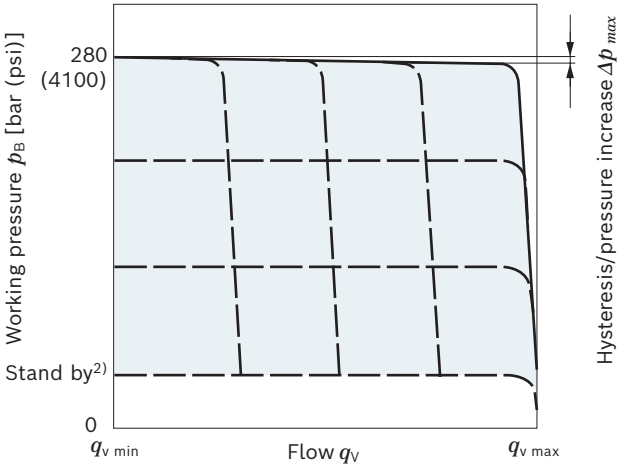

▼ **Characteristic curve at variable rotational speed**

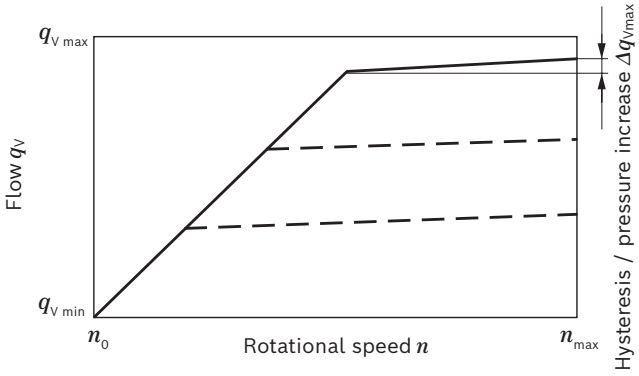

Characteristic curves valid at n_1 = 1500 rpm and ϑ_{fluid} = 50 °C (120 °F).

▼ **Circuit diagram DFR**

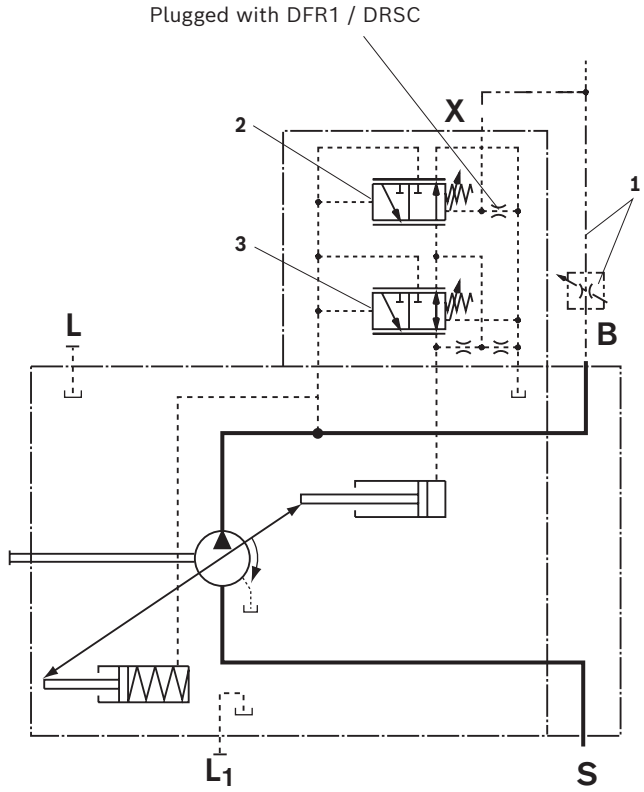

1 The metering orifice (control block) and the line is not included in the scope of delivery.
2 Flow controller (**FR**).
3 Pressure controller (**DR**)

Notice

- The DFR1 and DRSC versions have no unloading between **X** and the reservoir. The LS must thus be unloaded in the system. Because of the flushing function of the flow controller in the DFR1 control valve, sufficient unloading of the **X** line must also be provided. If this unloading of the **X** line cannot be ensured, the DFR control valve must be used.

For further information see page 16

1) In order to prevent damage to the pump and the system, the permissible setting range must not be exceeded. The range of possible settings at the valve is higher.
2) Zero stroke pressure from pressure setting Δp on controller (**2**)

Differential pressure Δ*p*:

- Standard setting: 14 bar (200 psi)
  If another setting is required, please state in plain text.
- Setting range: 14 bar to 22 bar (200 to 320 psi)

Unloading port **X** to the reservoir results in a zero stroke pressure (standby) which is approx. 1 to 2 bar (15 to 30 psi) higher than the defined differential pressure Δp, however system influences are not taken into account.

Controller data

DR pressure controller data, see page 13.

Maximum flow deviation measured at drive speed n = 1500 rpm.

NG		18	28	45	71	88	100
Pressure increase	Δp [bar (psi)]	4 (60)	4 (60)	6 (87)	8 (115)	9 (130)	10 (145)
Flow deviation	$\Delta q_{V\,max}$ [l/min (gpm)]	0.9 (0.20)	1.0 (0.30)	1.8 (0.50)	2.8 (0.70)	3.4 (0.90)	4.0 (1.10)
Hysteresis	Δp [bar (psi)]	maximum 4 (60)					
Pilot fluid consumption	[l/min (gpm)]	maximum approx. 3 to 4.5 (0.8 to 1.2) at DFR maximum approx. 3 (0.8) at DRS					

DFLR – Pressure, flow and power controller

Pressure controller equipped as DR(G), see page 13 and 14.
Flow controller equipped like DFR, DFR1, see page 15.
In order to achieve a constant drive torque with varying working pressures, the swivel angle and with it the output flow from the axial piston pump is varied so that the product of flow and pressure remains constant.
Flow control is possible below the power control curve.

▼ **Characteristic curve and torque characteristic**

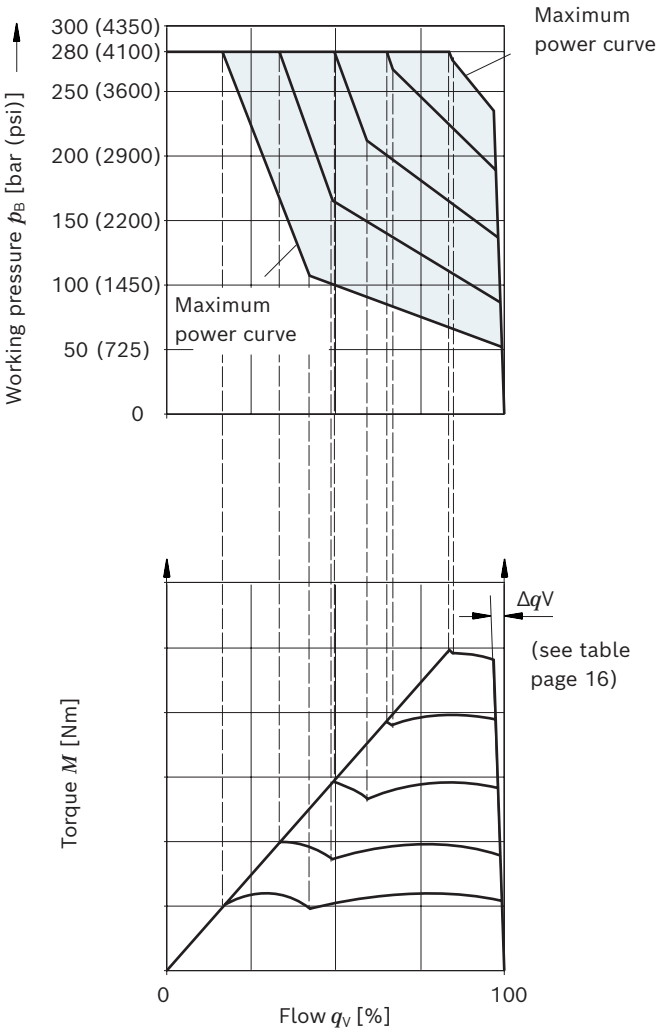

Please contact us regarding beginning of control at < 50 bar (725 psi).

When ordering please state the power characteristics to be set at the factory in plain text, e.g. 20 kW (27 HP) at 1500 rpm.

▼ **Circuit diagram DFLR**

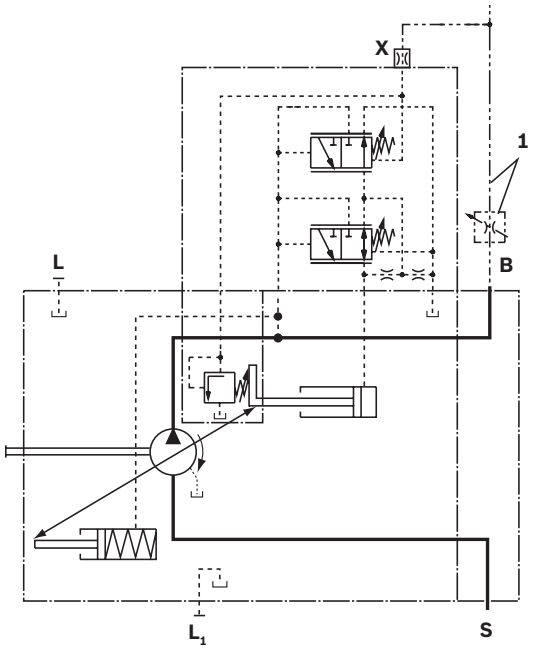

1 The metering orifice (control block) and the line is not included in the scope of delivery.

Controller data

- ▶ For technical data of pressure controller DR see page 13.
- ▶ For technical data of flow controller FR see page 16.
- ▶ Pilot fluid consumption: maximum approx. 5.5 l/min (1.5 gpm)

ED – Electrohydraulic pressure control

The ED valve is set to a certain pressure by a specified variable solenoid current.
When changing the consumer (load pressure), this causes an increase or decrease in the pump swivel angle (flow) in order to maintain the electrically set pressure level.
The pump thus only delivers as much hydraulic fluid as the consumers can take. The desired pressure level can be set steplessly by varying the solenoid current.
As the solenoid current signal drops towards zero, the pressure will be limited to p_{max} by an adjustable hydraulic pressure cut-off (secure fail safe function in case of power failure, e.g. for fan speed control). The swivel time characteristic of the ED control was optimized for the use as a fan drive system. When ordering, specify the type of application in plain text.

▼ **Current/pressure characteristic curve ED**
(negative characteristic curve)

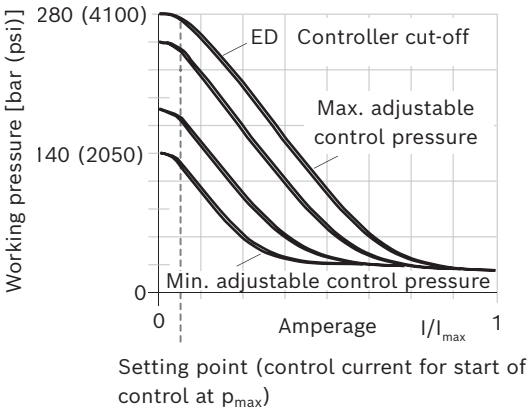

Hysteresis static < 25 bar (365 psi).

▼ **Flow-pressure characteristic curve**

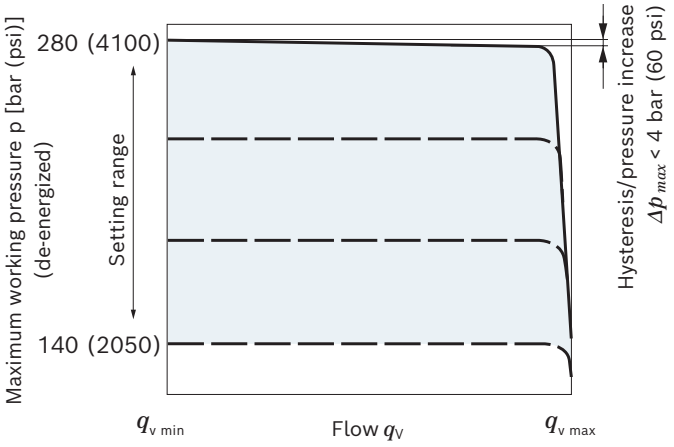

Characteristic curves valid at n_1 = 1500 rpm and ϑ_{fluid} = 50 °C (120 °F).

- Pilot fluid consumption: 3 to 4.5 l/min (0.8 to 1.2 gpm).
- For standby standard setting, see the following diagram; other values on request.

▼ **Influence of the pressure setting on standby (maximally energized)**

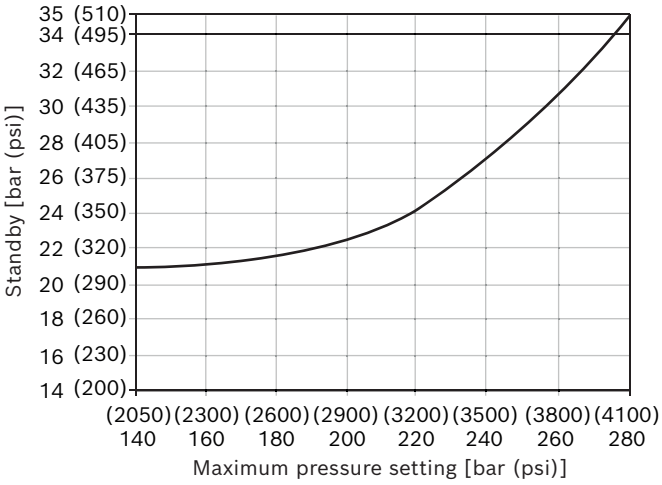

▼ **Circuit diagram ED71/ED72**

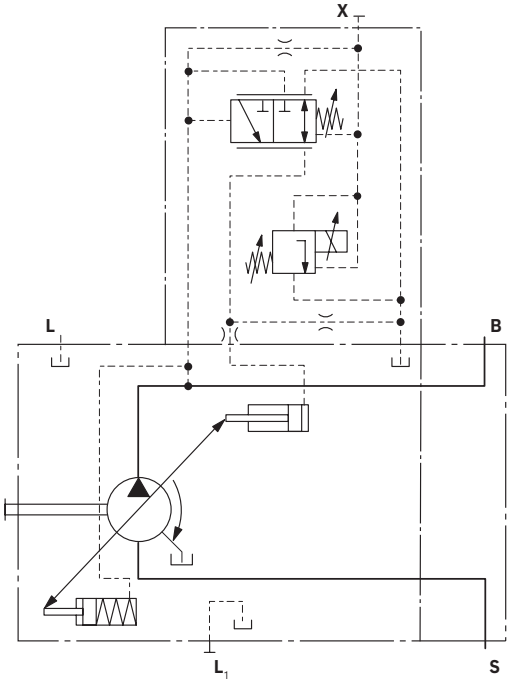

Technical data, solenoids	ED71	ED72
Voltage	12 V (±20%)	24 V (±20%)
Control current		
Start of control at p_{max}	100 mA	50 mA
Start of control at p_{min}	1200 mA	600 mA
Current limit	1.54 A	0.77 A
Nominal resistance (at 20 °C (68 °F))	5.5 Ω	22.7 Ω
Dither frequency	100 Hz	100 Hz
Recommended amplitude	120 mA	60 mA
Duty cycle	100%	100%
Type of protection: see connector version page 55		
Operating temperature range at valve -20 °C to +115 °C (-4 °F to +239 °F)		

The following electronic control units are available for controlling the electrohydraulic pressure control:

BODAS controllers	Data sheet
RC5-6, series 40	95207
RC18-12, series 40	95208
RC27-18, series 40	95208

Notice
With **ED71**, de-energized operating condition (jump from 100 to 0 mA) results in a pressure increase of the maximum pressure of 4 to 5 bar (60 to 75 psi).
With **ED72**, de-energized operating condition (jump from 50 to 0 mA) results in a pressure increase of the maximum pressure of 4 to 5 bar (60 to 75 psi).

ER – Electrohydraulic pressure control

The ER valve is set to a certain pressure by a specified variable solenoid current.
When changing the consumer (load pressure), this causes an increase or decrease in the pump swivel angle (flow) in order to maintain the electrically set pressure level.
The pump thus only delivers as much hydraulic fluid as the consumers can take. The desired pressure level can be set steplessly by varying the solenoid current. If the solenoid current drops towards zero, the pressure will be limited to p_{min} (standby) by an adjustable hydraulic pressure cut-off.
Observe project planning note.

▼ **Current-pressure characteristic curve**
(positive characteristic curve)

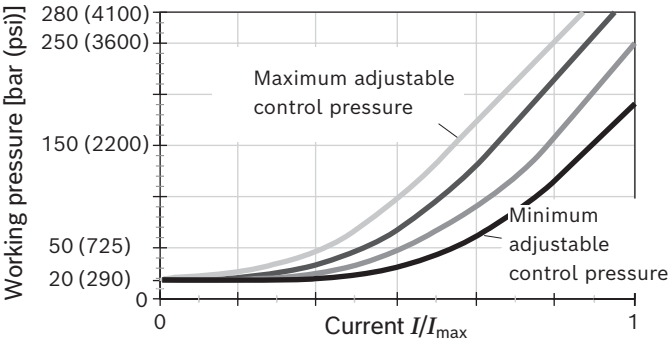

Hysteresis static < 25 bar (365 psi).

▼ **Flow-pressure characteristic curve**

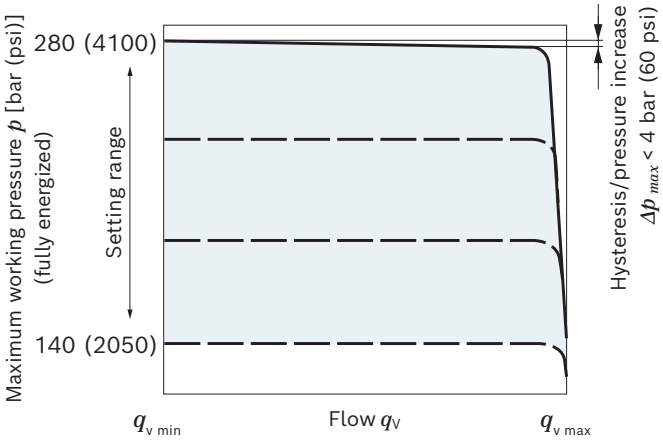

Characteristic curves valid at n_1 = 1500 rpm and ϑ_{fluid} = 50 °C (120 °F).

- Pilot fluid consumption: 3 to 4.5 l/min (0.8 to 1.2 gpm).
- Standby standard setting 20 bar (290 psi). Other values on request.
- Influence of pressure setting on standby ± 2 bar (± 30 psi).

▼ **Circuit diagram ER71/ER72**

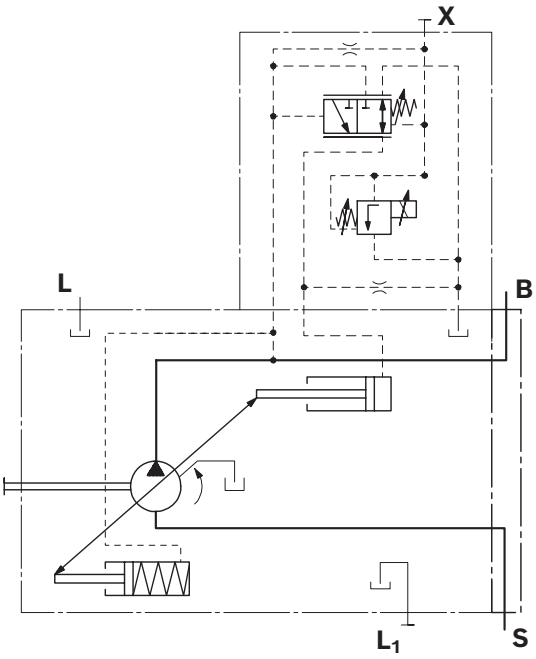

Technical data, solenoids	ER71	ER72
Voltage	12 V (±20%)	24 V (±20%)
Control current		
Start of control at p_{min}	100 mA	50 mA
End of control at p_{max}	1200 mA	600 mA
Current limit	1.54 A	0.77 A
Nominal resistance (at 20 °C (68 °F))	5.5 Ω	22.7 Ω
Dither frequency	100 Hz	100 Hz
Recommended amplitude	120 mA	60 mA
Duty cycle	100%	100%
Type of protection, see connector version page 55 Control electronics, see page 21		
Operating temperature range at valve -20 °C to +115 °C (-4 °F to +239 °F)		

The following electronic control units are available for controlling the electrohydraulic pressure control:

BODAS controllers	Data sheet
RC5-6, series 40	95207
RC18-12, series 40	95208
RC27-18, series 40	95208

Project planning note
Excessive current levels (I > 1200 mA at 12 V or I > 600 mA at 24 V) to the ER solenoid can result in undesired pressure increases which can lead to pump or system damage. Therefore:

- Use I_{max} current limiter solenoids.

EC4 – Electrohydraulic control valve (positive control)

The proportional directional valve EC4 serves to control an axial piston variable pump with eOC control functions in an electronically closed loop control circuit.
The valve spool is clamped between a proportional solenoid and a spring and releases a opening cross-section depending on the stroke.
This results in a proportionality of the solenoid current with respect to the opening cross-section and thus the swiveling speed of the pump.
The neutral position, which does not lead to a swivel motion, is assigned to a respective neutral current.
If the solenoid current is above the neutral current ($I_{neutral}$), the pump swivels in the direction of $V_{g\ max}$/100%; if it is below, the pump swivels in the direction of $V_{g\ min}$/0%.
A swivel angle sensor is required for control of the pump with BODAS eOC. It must be specified in type code position 14.
Further information about the swivel angle sensor PAL 2/10 is provided on page 56 and in data sheet 95161.
Further information on project planning of the BODAS eOC control system including other required system components can be found in data sheet 95345.
The BODAS eOC control software supports all four basic control types of axial piston variable pumps in electrically closed loop control circuits:

- Pressure and differential pressure regulation (p)
- Swivel angle and flow control (α)
- Torque control (M)
- Power control

▼ **Control variants with EC4**
Representation for positive quadrants 0% to +100%

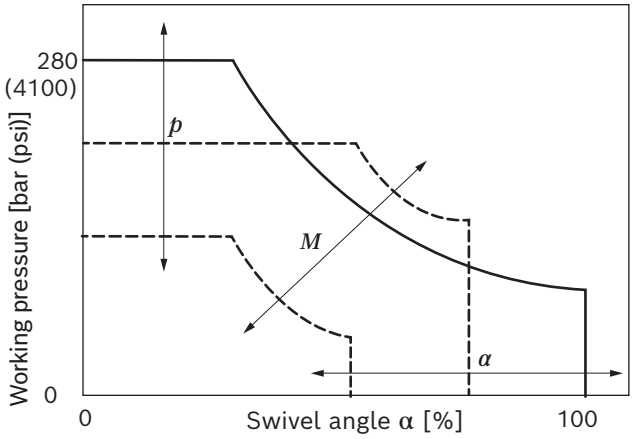

▼ **Circuit diagram EC4**

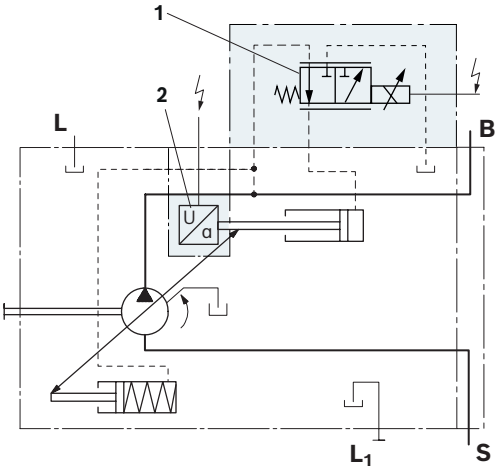

1 Proportional directional valve EC4
2 Swivel angle sensor (see data sheet 95161)

For further technical data on the solenoid with respective information, see pages 23 and 55.

The following electronic control units are available for control:

BODAS controllers	Data sheet
RC5-6, series 40	95207
RC18-12, series 40	95208
RC27-18, series 40	95208

▼ **Operating principle EC4**

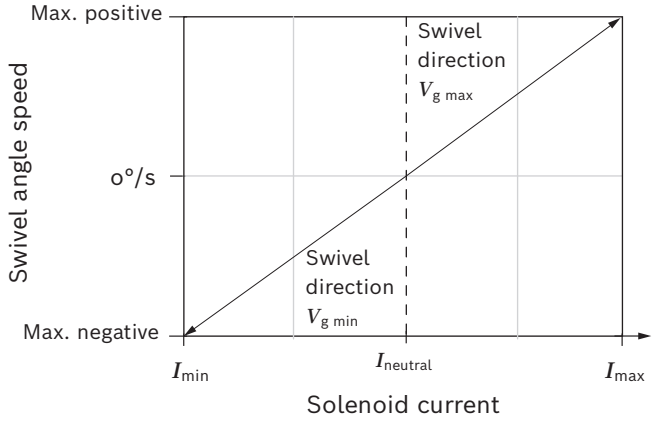

1) Representation for positive quadrants 0% to +100%

Solenoid technical data

	EC4
Permissible maximum solenoid current. The current duration with I_{max} depends on the mean current value ($I_{mean\ permissible}$ 1355 mA)	I_{max} < 1900 mA
Permissible average solenoid current over a maximum interval width of 5 s	$I_{Medium\ Perm}$ < 1355 mA
Nominal resistance at 20 °C (68 °F) winding temperature	4.26 Ω
Hot resistance 180 °C (356 °F) winding temperature	6.92 Ω
Limit temperature for winding	Insulating material class H (180 °C (356 °F))
Hydraulic fluid or operating temperature	from -40 °C to 110 °C (-40 °F to 230 °F)
Type of protection, see page 55	

Notice

- The limit voltage of the coil is 36 VDC. In general, the maximum current must not be exceeded by the actual current.
- For calculation of the hot resistance, a temperature coefficient of 0.0039k^{-1} is to be applied.
- A variable dither is necessary. The frequency and amplitude must be adapted to the specific system.

▼ **Characteristic curve of permitted operating range**
Example: At a hydraulic fluid temperature of 88 °C (190 °F), an ambient temperature of 110 °C (230 °F) is permitted.

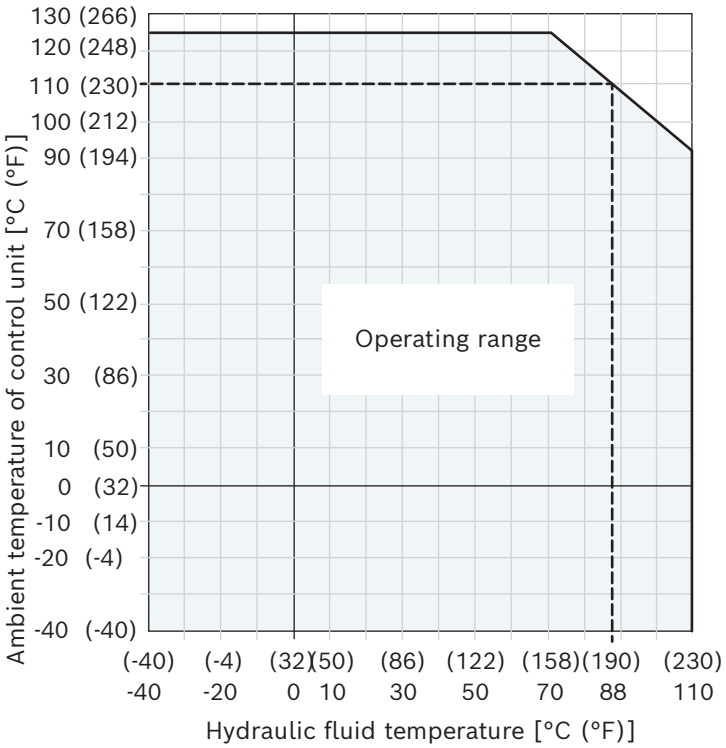

EB4 – Electrohydraulic control valve (negative control)

The proportional directional valve EB4 serves to control an axial piston variable pump with eOC control functions in an electronically closed loop control circuit.
The valve spool is clamped between a proportional solenoid and a spring and releases a opening cross-section depending on the stroke.
This results in a proportionality of the solenoid current with respect to the opening cross-section and thus the swiveling speed of the pump.
The neutral position, which does not lead to a swivel motion, is assigned to a respective neutral current.
If the solenoid current is below the neutral current ($I_{neutral}$), the pump swivels in the direction of $V_{g\ max}$/100%; if it is above, the pump swivels in the direction of $V_{g\ min}$/0%.
A swivel angle sensor is required for control of the pump with BODAS eOC. It must be specified in type code position 14.
Further information about the swivel angle sensor PAL 2/10 is provided on page 56 and in data sheet 95161.
Further information on project planning of the BODAS eOC control system including other required system components can be found in data sheet 95345.
The BODAS eOC control software supports all four basic control types of axial piston variable pumps in electrically closed loop control circuits:

- Pressure and differential pressure regulation (p)
- Swivel angle and flow control (α)
- Torque control (M)
- Power control

▼ **Control variants with EB4**
Representation for positive quadrants 0% to +100%

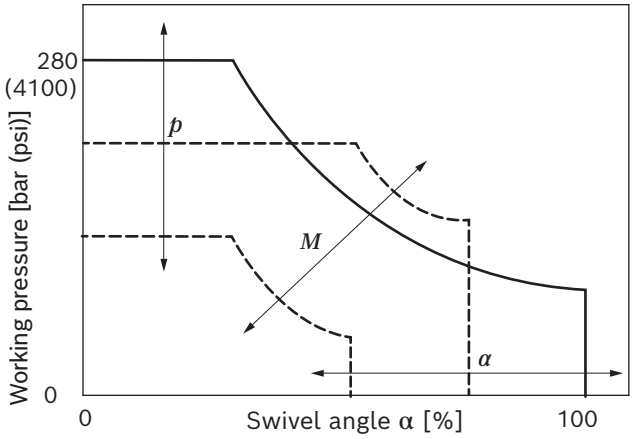

▼ **Circuit diagram EB4**

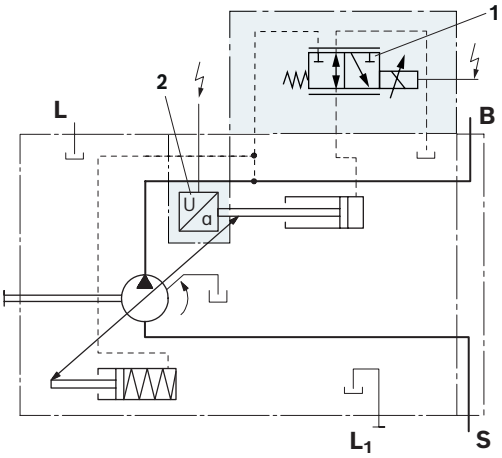

1 Proportional directional valve EB4
2 Swivel angle sensor (see data sheet 95161)

For further technical data on the solenoid with respective information, see pages 25 and 55.

The following electronic control units are available for control:

BODAS controllers	Data sheet
RC5-6, series 40	95207
RC18-12, series 40	95208
RC27-18, series 40	95208

▼ **Operating principle EB4**

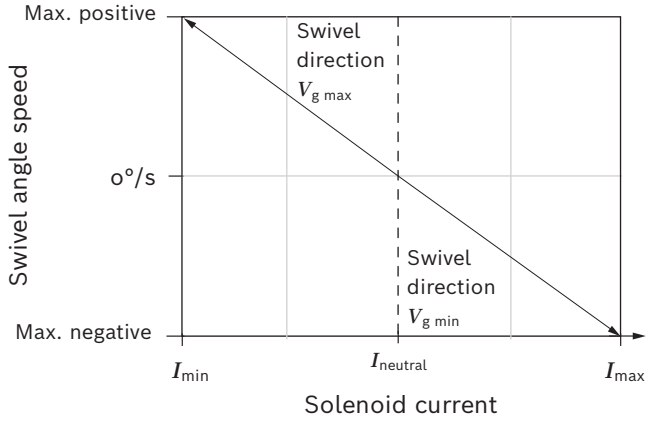

Solenoid technical data

	EB4
Permissible maximum solenoid current. The current duration with I_{max} depends on the mean current value ($I_{mean\ permissible}$ 1355 mA)	I_{max} < 4000 mA
Permissible average solenoid current over a maximum interval width of 5 s	$I_{Medium\ Perm}$ < 1355 mA
Nominal resistance at 20 °C (68 °F) winding temperature	4.26 Ω
Hot resistance at 180 °C (356 °F) winding temperature	6.92 Ω
Limit temperature for winding	Insulating material class H (180 °C (356 °F))
Hydraulic fluid or operating temperature	from -40 °C to 110 °C (-40 °F to 230 °F)
Type of protection, see page 55	

Notice

- The limit voltage of the coil is 36 VDC. In general, the maximum current must not be exceeded by the actual current.
- For calculation of the hot resistance, a temperature coefficient of 0.0039k^{-1} is to be applied.
- A variable dither is necessary. The frequency and amplitude must be adapted to the specific system.

▼ **Characteristic curve of permitted operating range**
Example: At a hydraulic fluid temperature of 88 °C (190 °F), an ambient temperature of 110 °C (230 °F) is permitted.

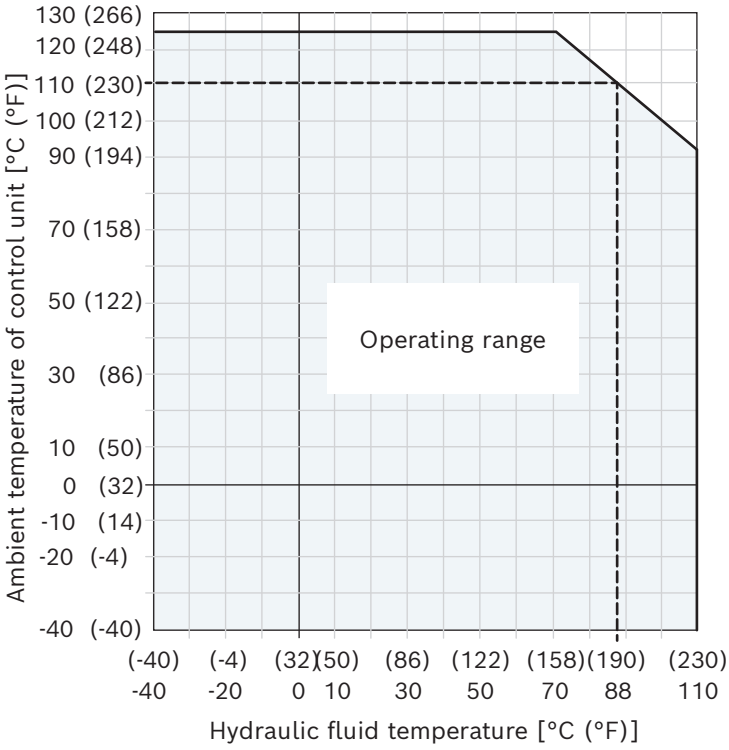

Dimensions, size 18

DFR / DFR1 / DRSC – Pressure flow controller, hydraulic; clockwise rotation, version: Ports metric

▼ **Port plate 12**

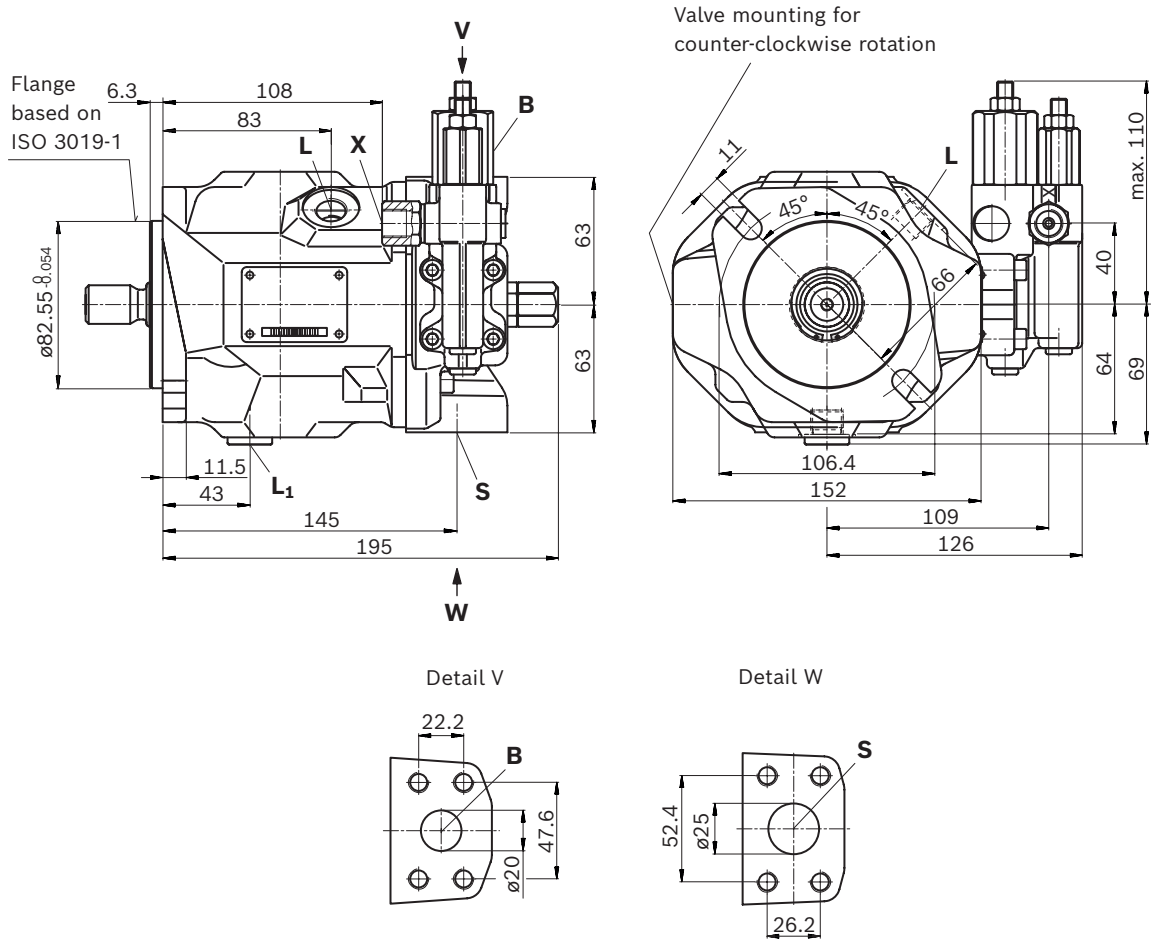

Dimensions, size 18

DFR / DFR1 / DRSC – Pressure flow controller, hydraulic; clockwise rotation, version: SAE ports

▼ **Port plate 62**

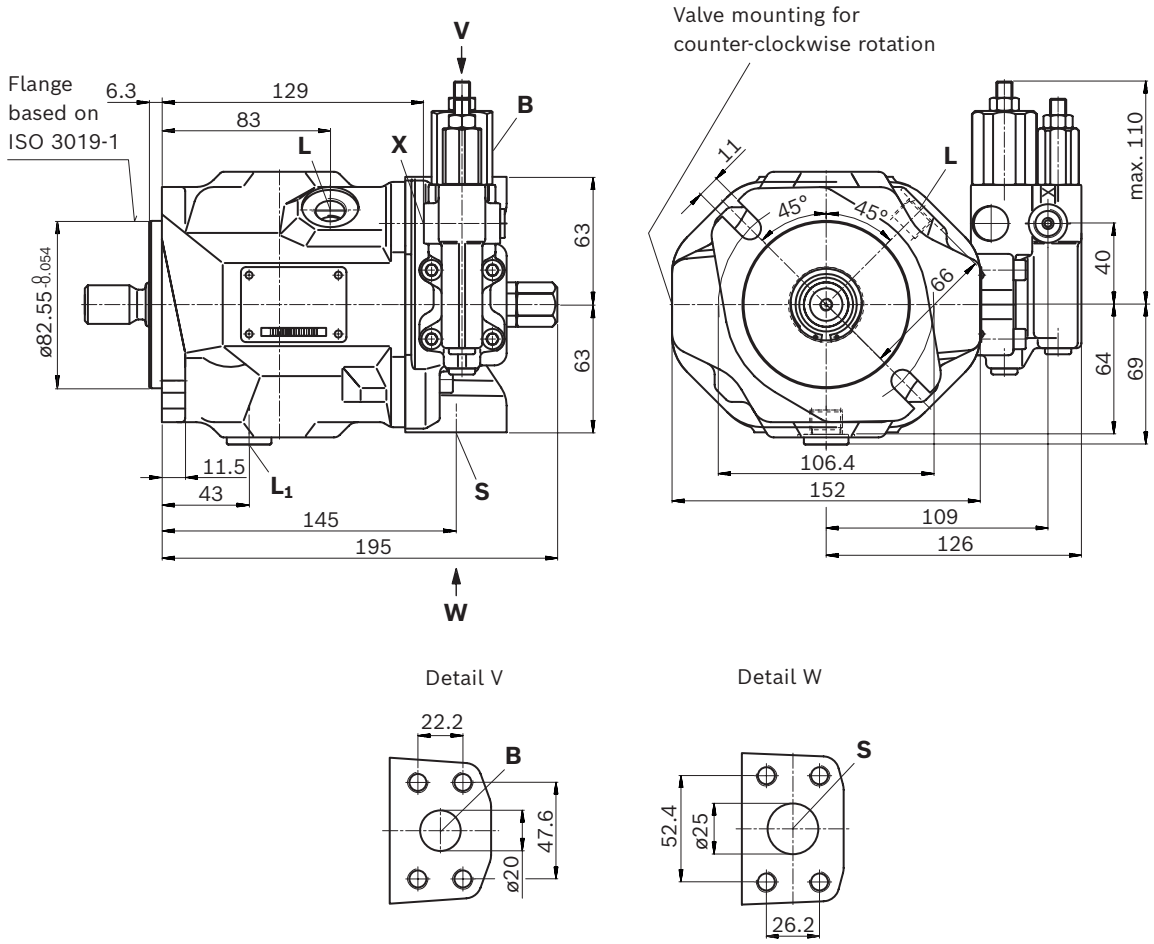

▼ **Splined shaft 3/4 in (19-4, ISO 3019-1)**

S – 11T 16/32DP[1)]

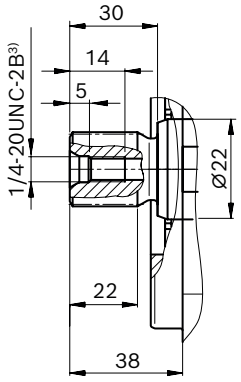

▼ **Splined shaft 3/4 in (similar to ISO 3019-1)**

R – 11T 16/32DP[1)2)]

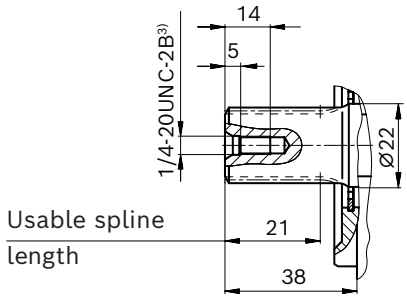

▼ **Splined shaft 5/8 in (16-4, ISO 3019-1)**

U – 9T 16/32DP[1)]

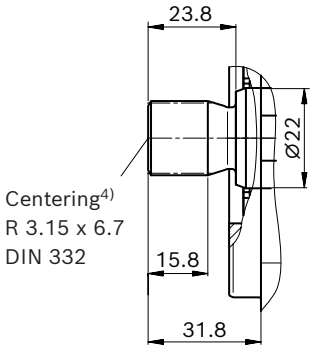

Ports - version metric port plate 12		**Standard**	**Size**	p_{max} **[bar (psi)]**[5)]	**State**[8)]
B	Working port (standard pressure series) Fastening thread	ISO 6162-1 DIN 13	3/4 in M10 × 1.5; 17 (0.67) deep	350 (5100)	O
S	Suction port (standard pressure series) Fastening thread	ISO 6162-1 DIN 13	1 in M10 × 1.5; 17 (0.67) deep	10 (145)	O
L	Drain port	DIN 3852[6)]	M16 × 1.5; 12 (0.47) deep	2 (30)	O[7)]
L_1	Drain port	DIN 3852[6)]	M16 × 1.5; 12 (0.47) deep	2 (30)	X[7)]
X	Pilot pressure	DIN 3852	M14 × 1.5; 12 (0.47) deep	350 (5100)	O
X	Pilot pressure with DG-control	DIN 3852-2	G1/4 in; 12 (0.47) deep	350 (5100)	O

Ports - version SAE port plate 62		**Standard**	**Size**	p_{max} **[bar (psi)]**[5)]	**State**[8)]
B	Working port (standard pressure series) Fastening thread	ISO 6162-1 ASME B1.1	3/4 in 3/8-16 UNC-2B; 20 (0.79) deep	350 (5100)	O
S	Suction port (standard pressure series) Fastening thread	ISO 6162-1 ASME B1.1	1 in 3/8-16 UNC-2B; 20 (0.79) deep	10 (145)	O
L	Drain port	ISO 11926[6)]	9/16-18 UNF-2B; 13 (0.51) deep	2 (30)	O[7)]
L_1	Drain port	ISO 11926[6)]	9/16-18 UNF-2B; 13 (0.51) deep	2 (30)	X[7)]
X	Pilot pressure	ISO 11926	7/16-20 UNF-2B; 11.5 (0.45) deep	350 (5100)	O
X	Pilot pressure with DG-control	DIN 3852-2	G1/4 in; 12 (0.47) deep	350 (5100)	O

1) Involute spline according to ANSI B92.1a, 30° pressure angle, flat root, side fit, tolerance class 5
2) Splines according to ANSI B92.1a, spline runout is a deviation from standard ISO 3019-1.
3) Thread according to ASME B1.1
4) Coupling axially secured, e.g. with a clamp coupling or radially mounted clamping screw
5) Depending on the application, momentary pressure peaks can occur. Keep this in mind when selecting measuring devices and fittings.
6) The countersink may be deeper than specified in the standard.
7) Depending on the installation position, L or L_1 must be connected (also see installation instructions on page 57).
8) O = Must be connected (plugged on delivery)
X = Plugged (in normal operation)

▼ **DG – Two-point control, direct operated**

Port plate 12 (62)

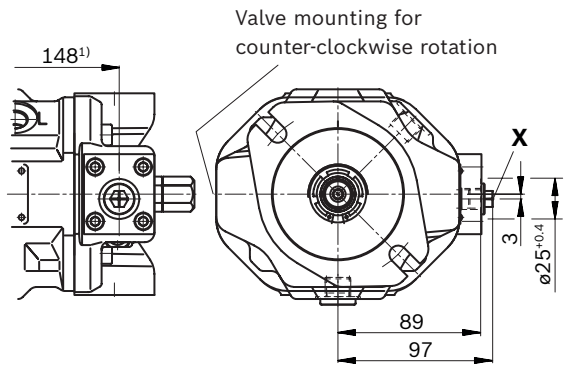

▼ **DR – Pressure controller**

Port plate 12 (62)

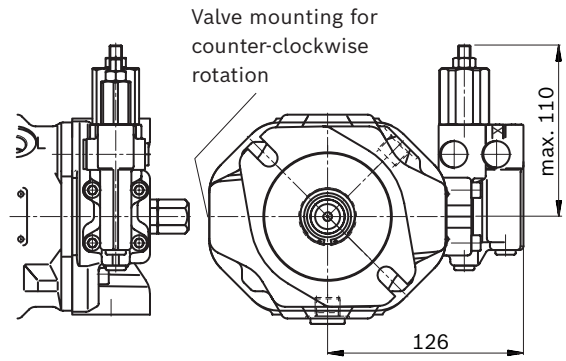

▼ **DRG – Pressure controller, remote controlled**

Port plate 12 (62)

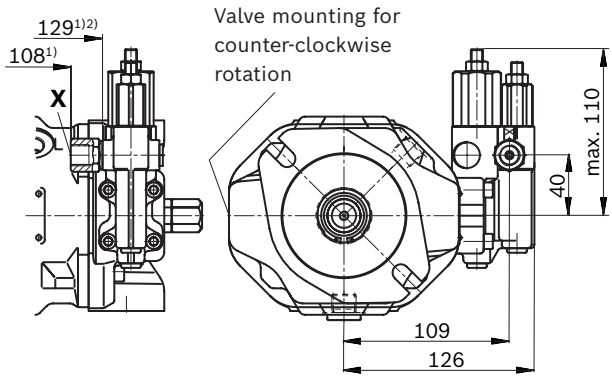

▼ **ED7.,ER7. – Electrohydraulic pressure control**

Port plate 12 (62)

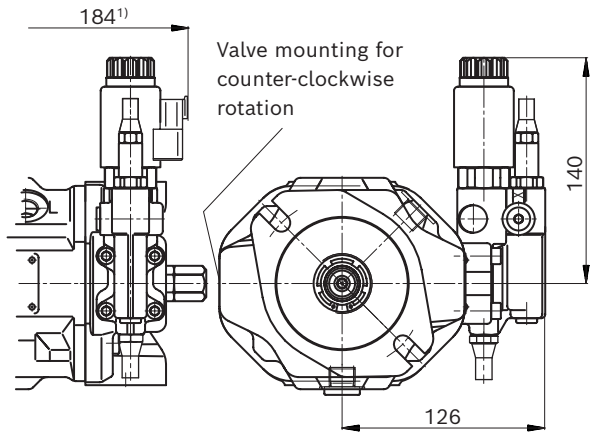

1) To flange surface
2) For version with port plates 62

Dimensions, size 28

DFR / DFR1 / DRSC – Pressure flow controller, hydraulic; clockwise rotation, version: Ports metric

▼ **Port plate 12**

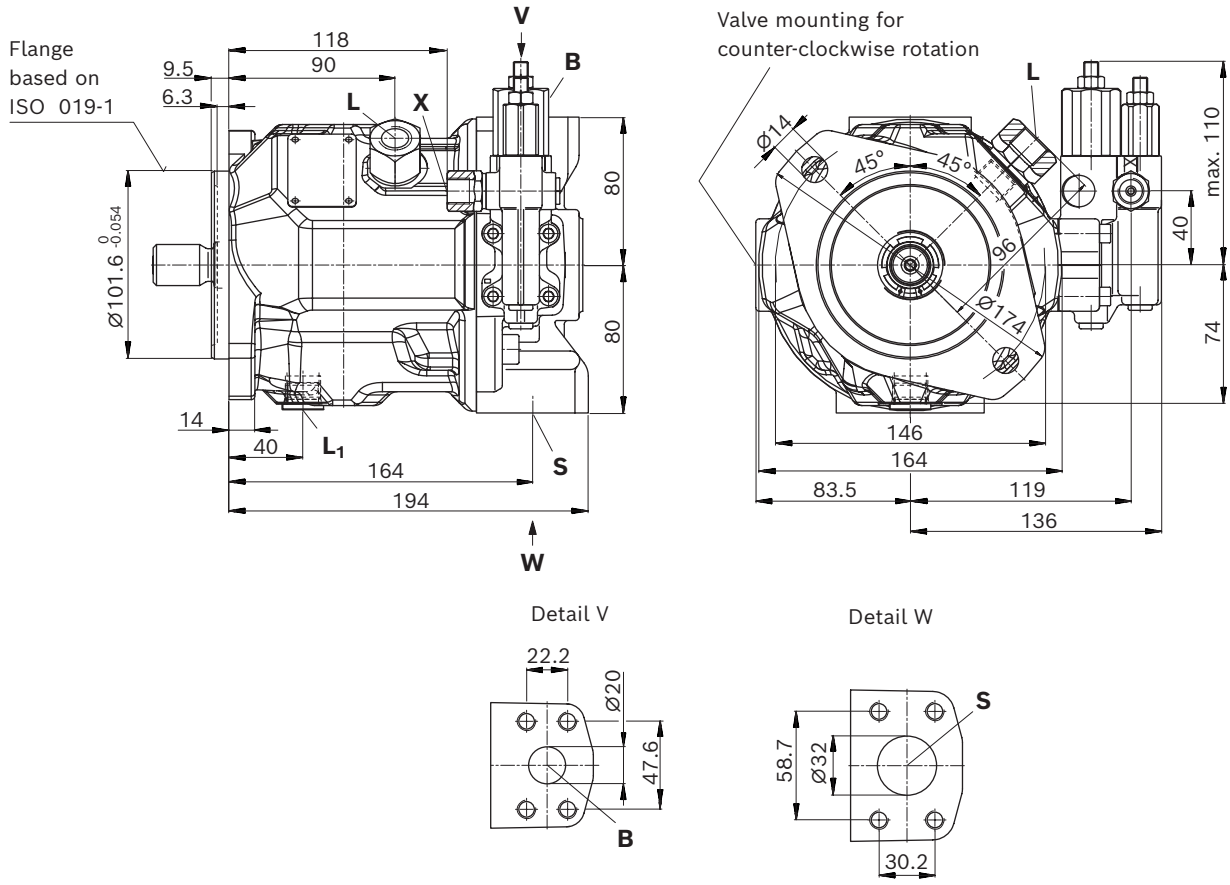

▼ **Port plate 11**

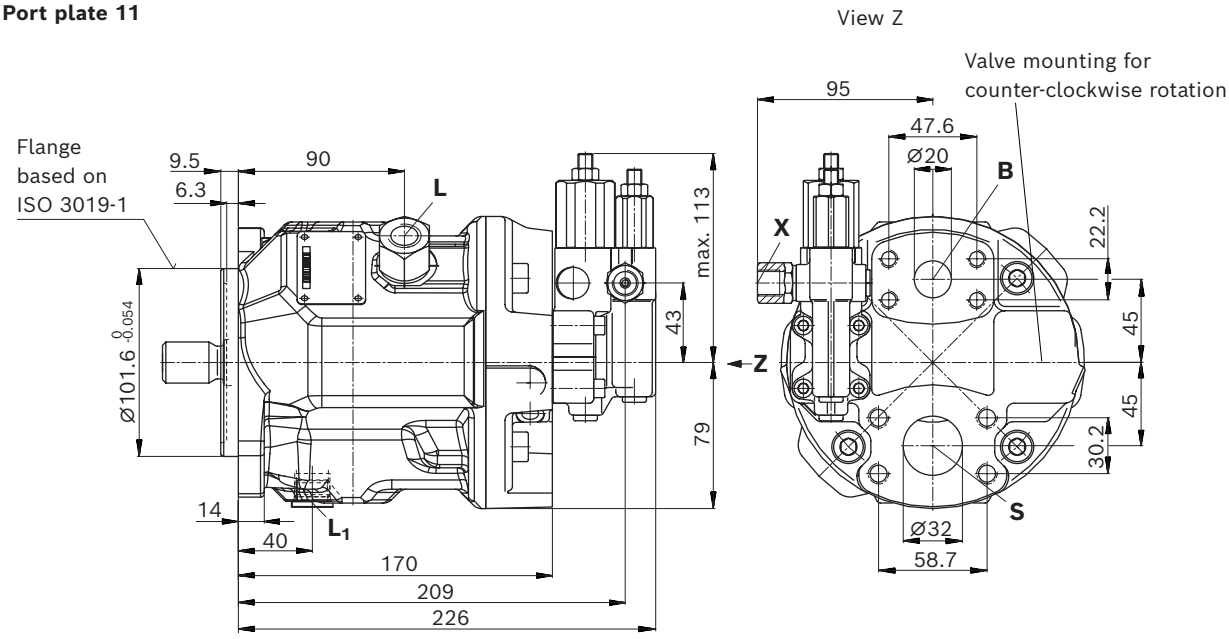

Dimensions, size 28

DFR / DFR1 / DRSC – Pressure flow controller, hydraulic; clockwise rotation, version: SAE ports

▼ **Port plate 62**

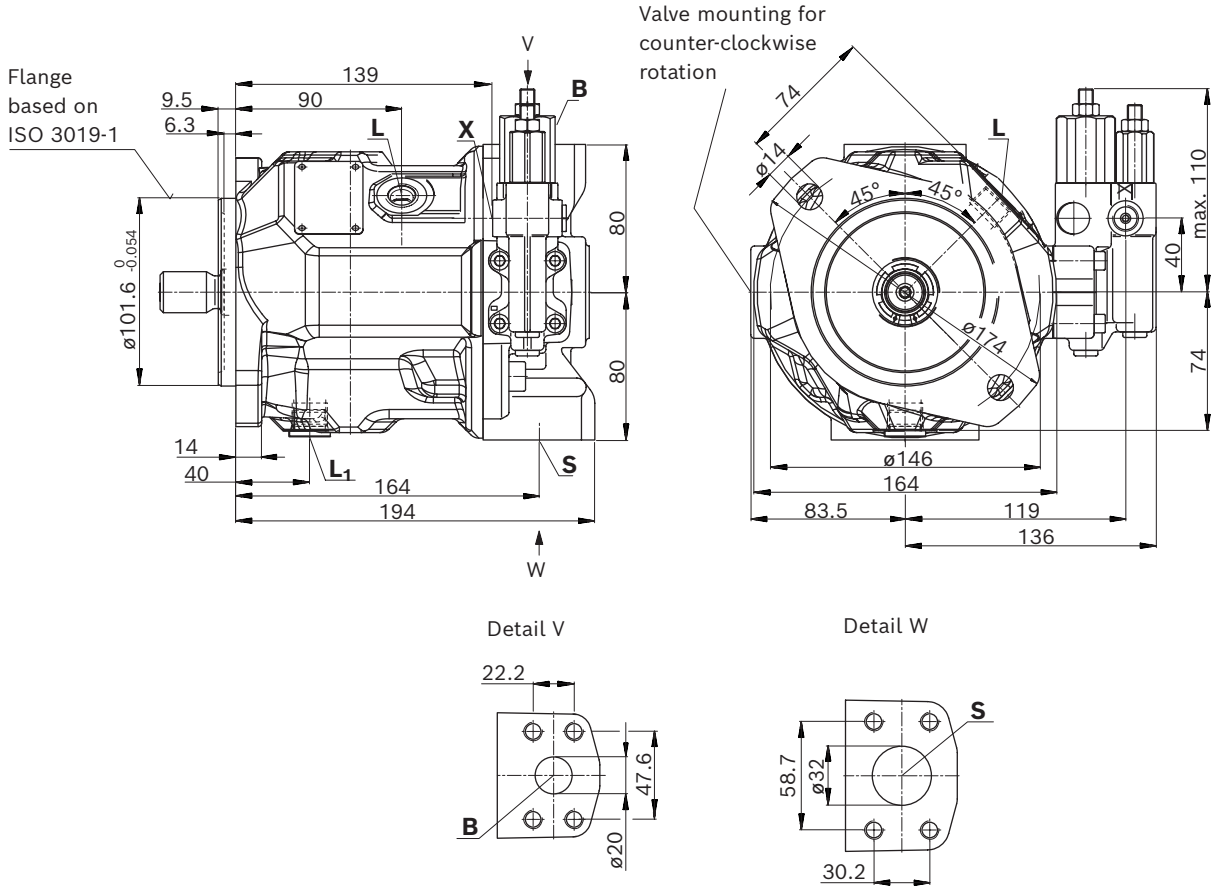

▼ **Port plate 61**

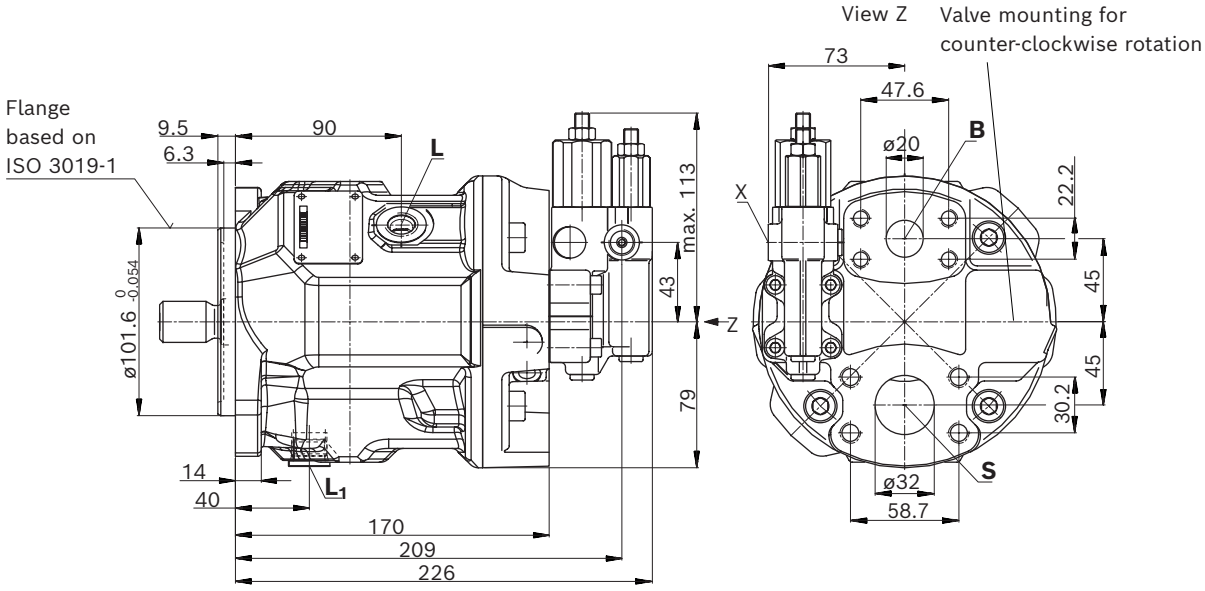

▼ **Splined shaft 7/8 in (22-4, ISO 3019-1)**

S – 13T 16/32DP[1)]

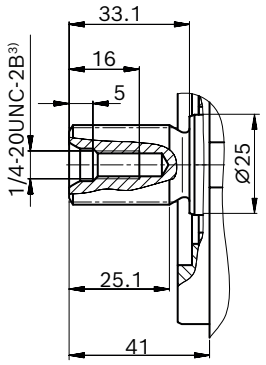

▼ **Splined shaft 7/8 in (similar to ISO 3019-1)**

R – 13T 16/32DP[1)2)]

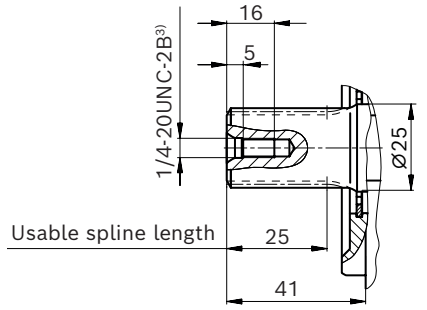

▼ **Splined shaft 3/4 in (19-4, ISO 3019-1)**

U – 11T 16/32DP[1)]

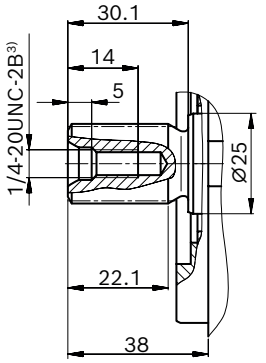

▼ **Splined shaft 3/4 in (similar to ISO 3019-1)**

W – 11T 16/32DP[1)2)]

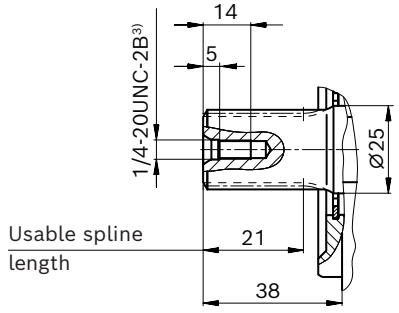

Ports - version metric port plate 11/12		**Standard**	**Size**	p_{max} **[bar (psi)]**[4)]	**State**[7)]
B	Working port (standard pressure series) Fastening thread	ISO 6162-1 DIN 13	3/4 in M10 × 1.5; 17 (0.67) deep	350 (5100)	O
S	Suction port (standard pressure series) Fastening thread	ISO 6162-1 DIN 13	1 1/4 in M10 × 1.5; 17 (0.67) deep	10 (145)	O
L	Drain port	DIN 3852[5)]	M18 × 1.5; 12 (0.47) deep	2 (30)	O[6)]
L_1	Drain port	ISO 11926[5)]	3/4-16 UNF-2B; 15 (0.59) deep	2 (30)	X[6)]
X	Pilot pressure	DIN 3852	M14 × 1.5; 12 (0.47) deep	350 (5100)	O
X	Pilot pressure with DG-control	DIN 3852-2	G1/4 in; 12 (0.47) deep	350 (5100)	O

Ports - version SAE port plate 61/62		**Standard**	**Size**	p_{max} **[bar (psi)]**[4)]	**State**[7)]
B	Working port (standard pressure series) Fastening thread	ISO 6162-1 ASME B1.1	3/4 in 3/8-16 UNC-2B; 20 (0.79) deep	350 (5100)	O
S	Suction port (standard pressure series) Fastening thread	ISO 6162-1 ASME B1.1	1 1/4 in 7/16-14 UNC-2B; 24 (0.94) deep	10 (145)	O
L	Drain port	ISO 11926[5)]	3/4-16 UNF-2B; 15 (0.59) deep	2 (30)	O[6)]
L_1	Drain port	ISO 11926[5)]	3/4-16 UNF-2B; 15 (0.59) deep	2 (30)	X[6)]
X	Pilot pressure	ISO 11926	7/16-20 UNF-2B; 11.5 (0.45) deep	350 (5100)	O
X	Pilot pressure with DG-control	DIN 3852-2	G1/4 in; 12 (0.47) deep	350 (5100)	O

1) Involute spline according to ANSI B92.1a, 30° pressure angle, flat root, side fit, tolerance class 5
2) Splines according to ANSI B92.1a, spline runout is a deviation from standard ISO 3019-1.
3) Thread according to ASME B1.1
4) Depending on the application, momentary pressure peaks can occur. Keep this in mind when selecting measuring devices and fittings.
5) The countersink may be deeper than specified in the standard.
6) Depending on the installation position, L or L_1 must be connected (also see installation instructions on page 57).
7) O = Must be connected (plugged on delivery)
X = Plugged (in normal operation)

▼ **DG – Two-point control, direct operated**

Port plate 11 (61)

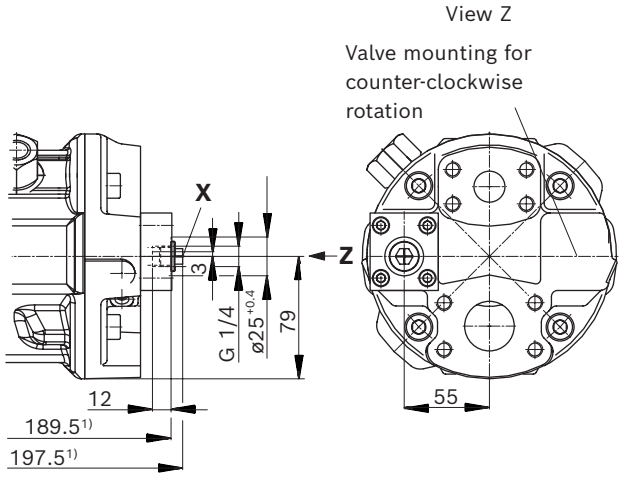

▼ **DG – Two-point control, direct operated**

Port plate 12 (62)

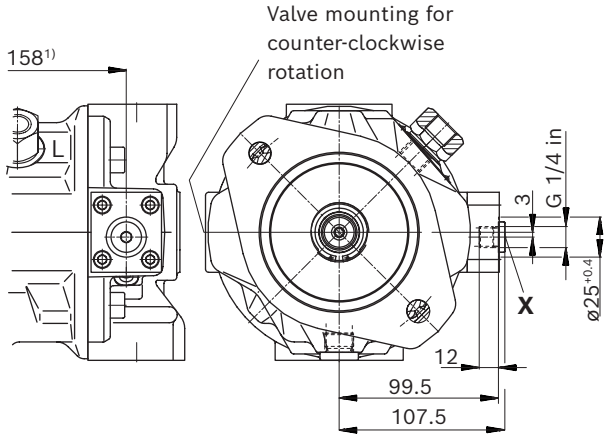

▼ **DR – Pressure controller**

Port plate 11 (61)

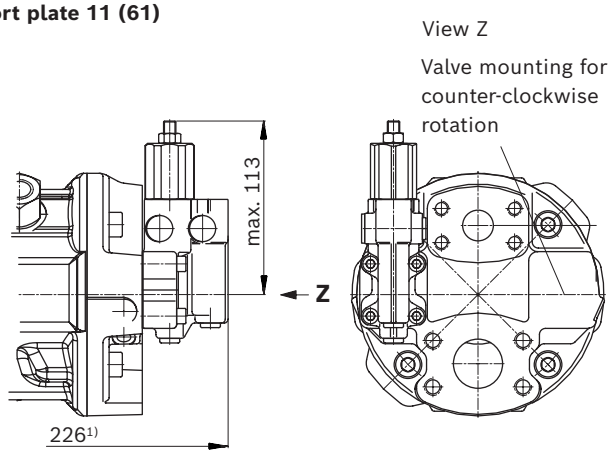

▼ **DR – Pressure controller**

Port plate 12 (62)

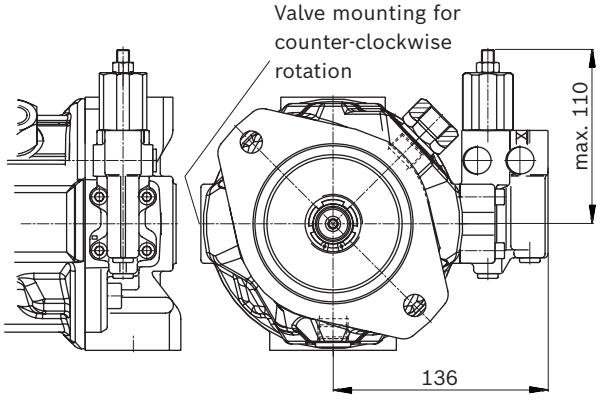

▼ **DRG – Pressure controller, remote controlled**

Port plate 11 (61)

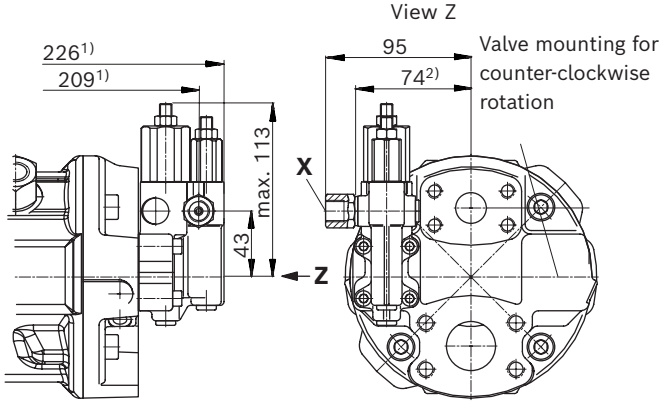

▼ **DRG – Pressure controller, remote controlled**

Port plate 12 (62)

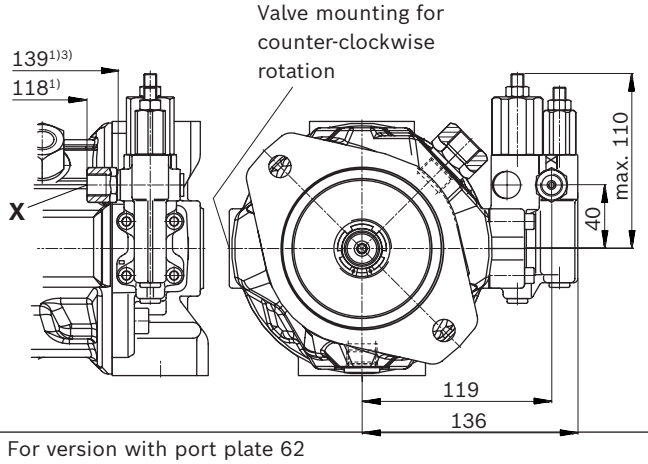

1) To flange surface
2) For version with port plate 61
3) For version with port plate 62

▼ **DFLR – Pressure, flow and power controller**

Port plate 11 (61)

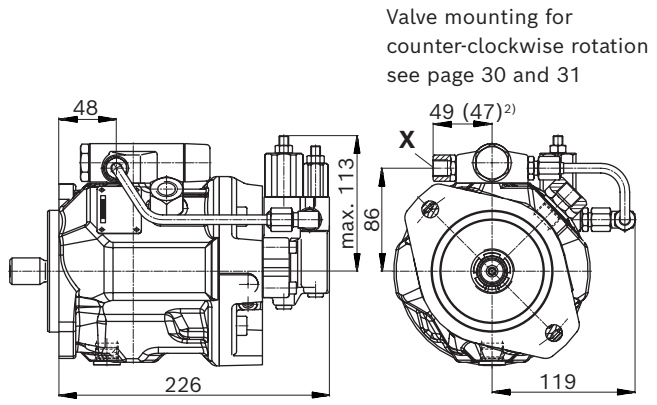

▼ **DFLR – Pressure, flow and power controller**

Port plate 12 (62)

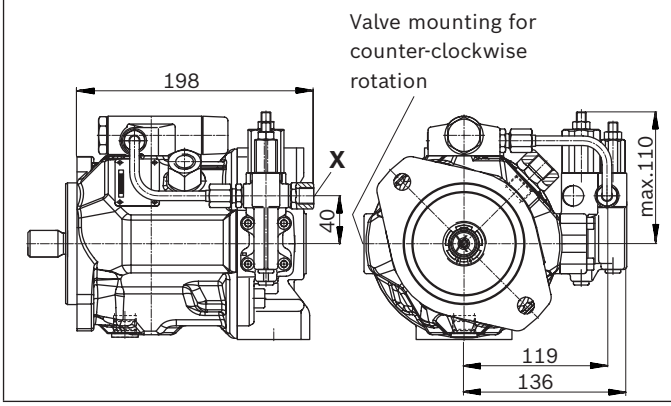

▼ **ED7. / ER7. – Electrohydraulic pressure control**

Port plate 11 (61)

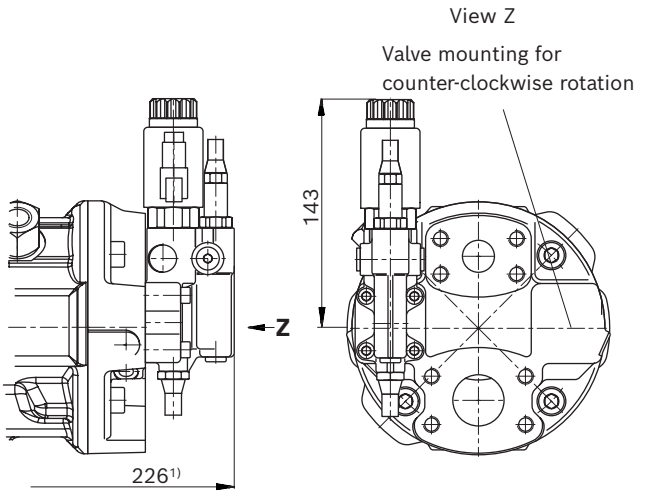

▼ **ED7. / ER7. – Electrohydraulic pressure control**

Port plate 12 (62)

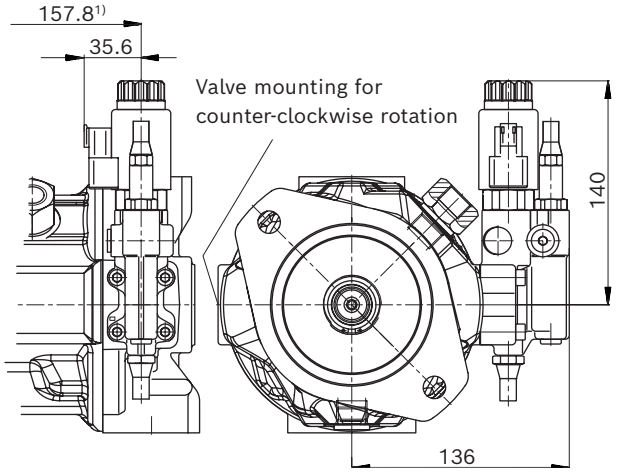

▼ **EC4/EB4 – Elektrohydraulisches Regelventil**

Anschlussplatte 11 (61)

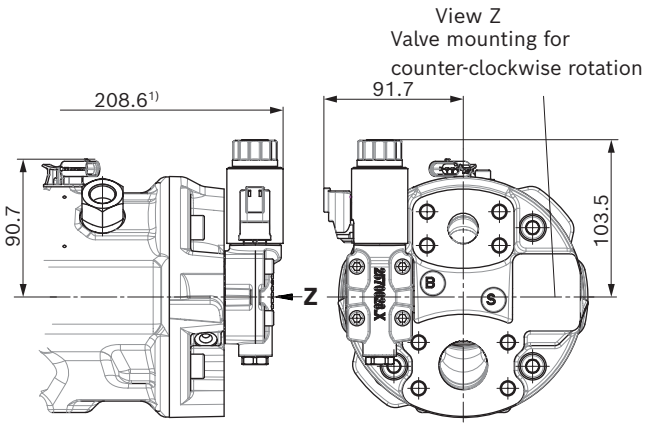

▼ **EC4/EB4 – Elektrohydraulisches Regelventil**

Anschlussplatte 12 (62)

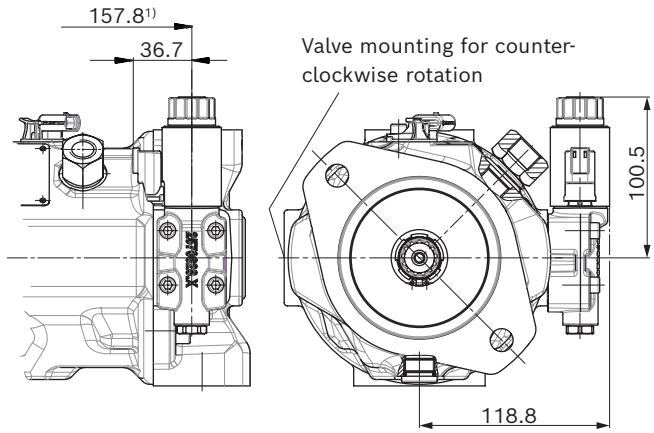

1) To flange surface
2) For version with port plate 61

Dimensions, size 45

DFR / DFR1 / DRSC – Pressure flow controller, hydraulic; clockwise rotation, version: Ports metric

▼ **Port plate 12**

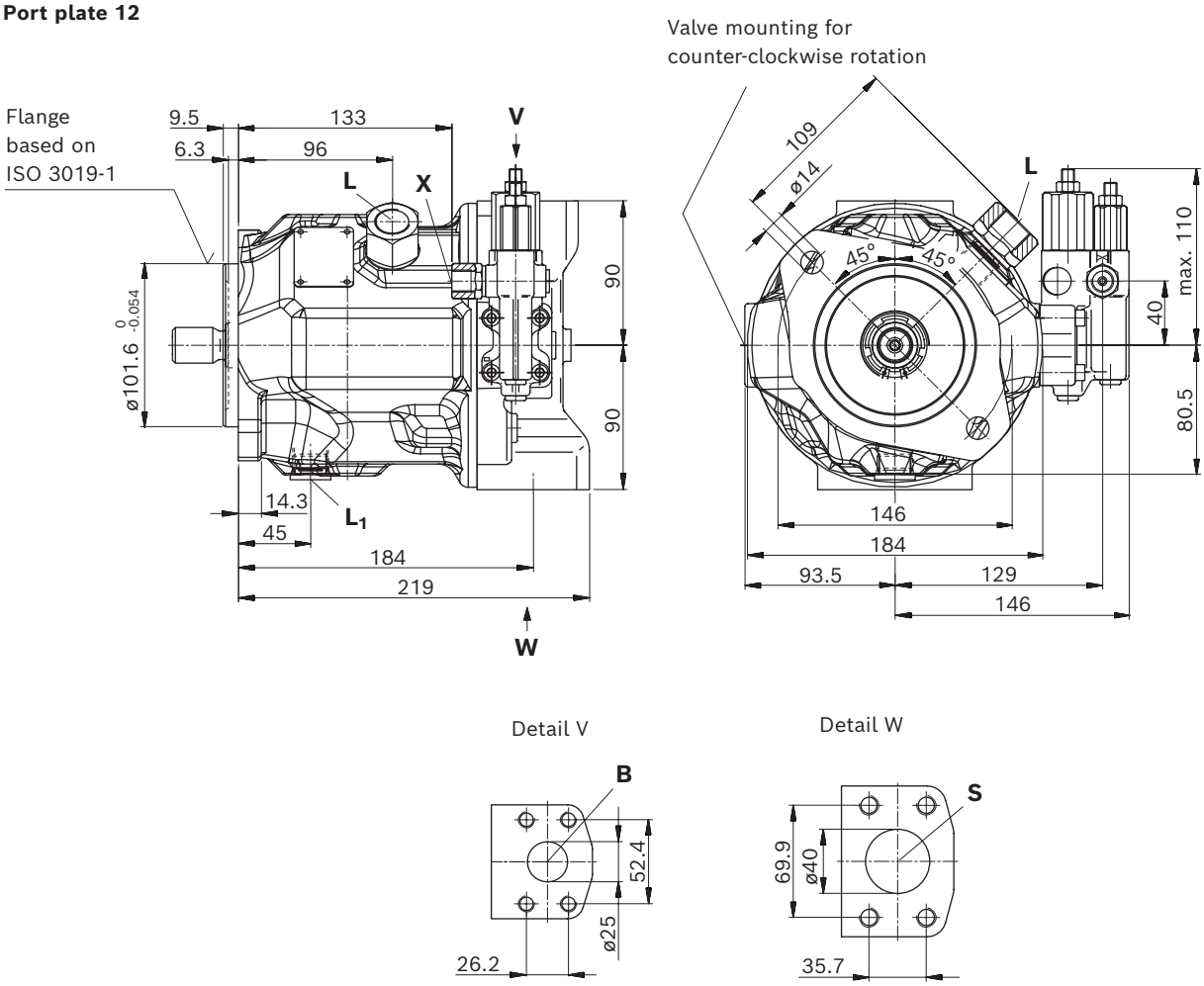

▼ **Port plate 11**

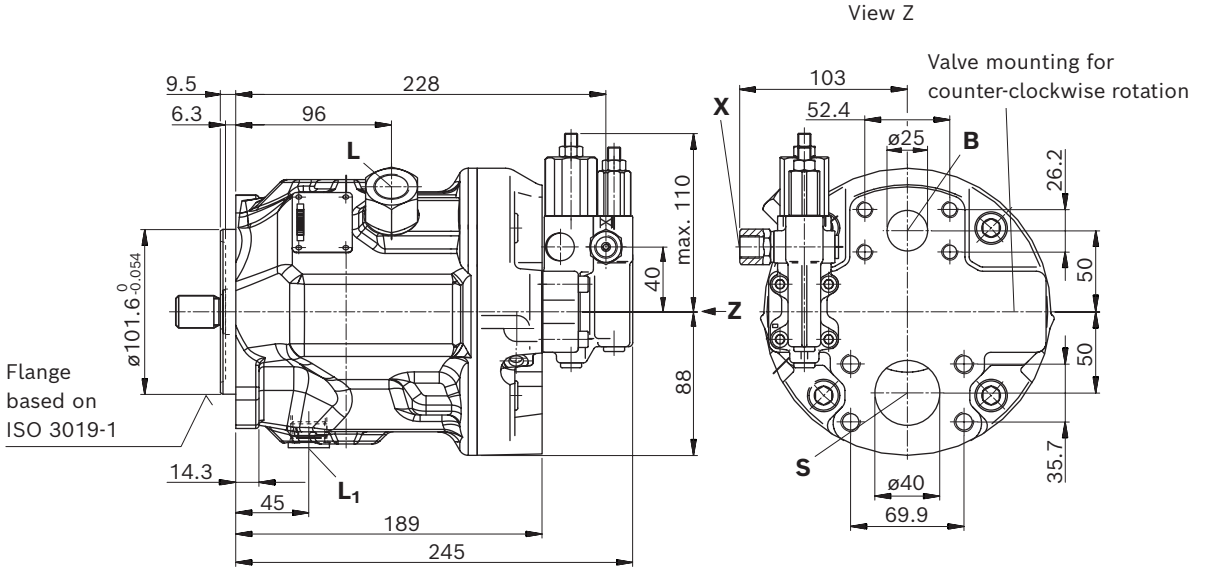

Dimensions, size 45

DFR / DFR1 / DRSC – Pressure flow controller, hydraulic; clockwise rotation, version: SAE ports

▼ **Port plate 62**

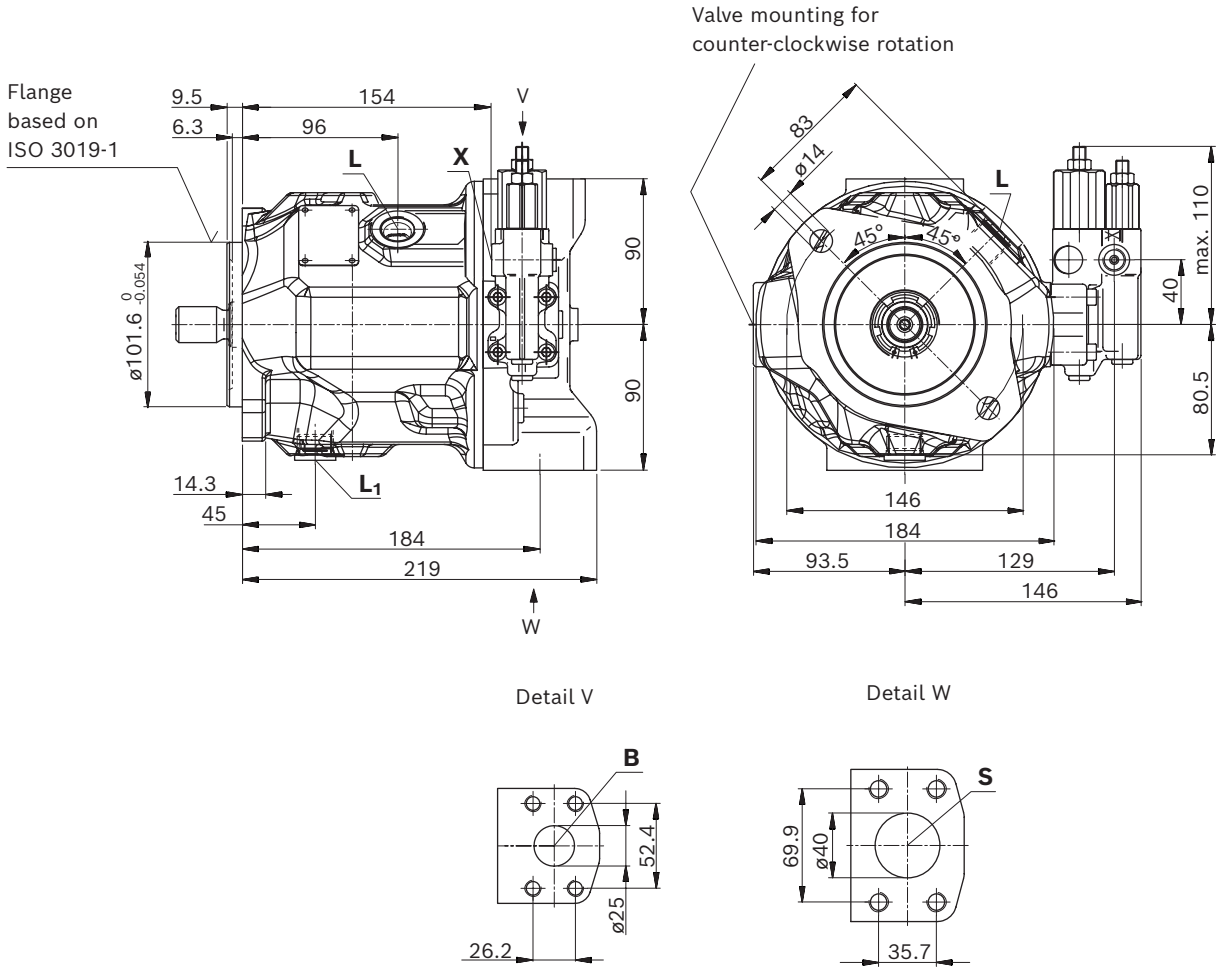

▼ **Port plate 61**

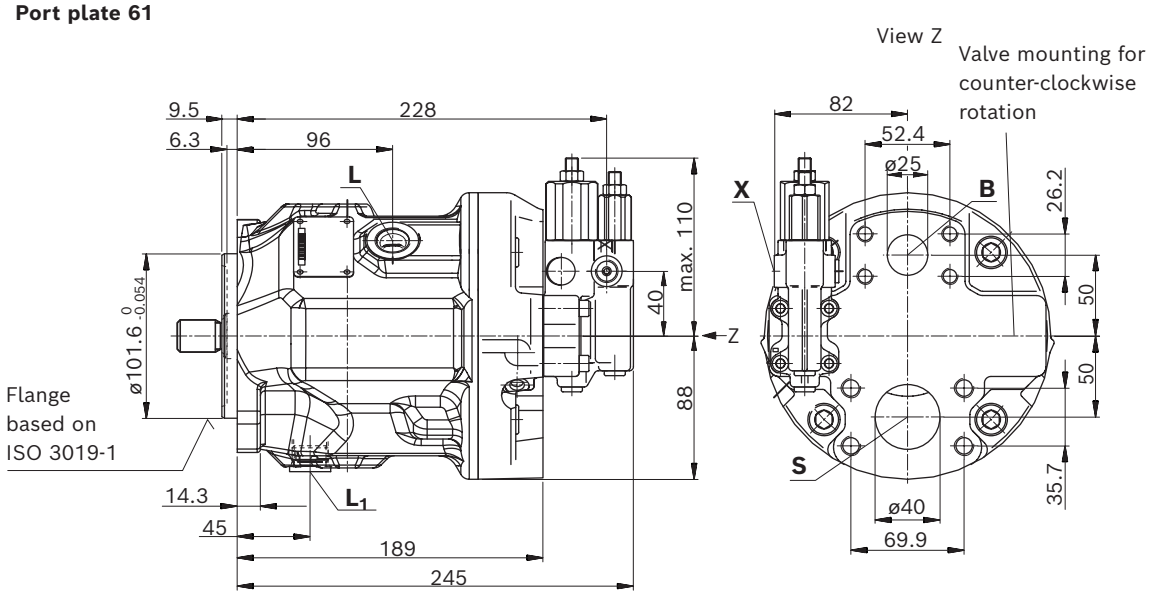

▼ **Splined shaft 1 in (25-4, ISO 3019-1)**

S – 15T 16/32DP[1)]

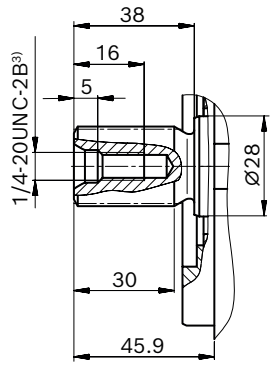

▼ **Splined shaft 1 in (similar to ISO 3019-1)**

R – 15T 16/32DP[1)2)]

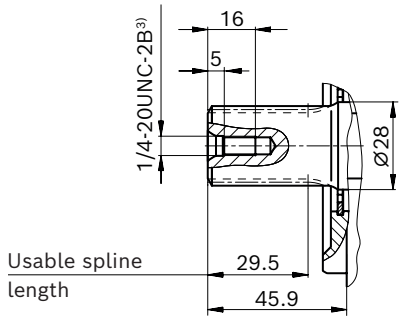

▼ **Splined shaft 7/8 in (22-4, ISO 3019-1)**

U – 13T 16/32DP[1)]

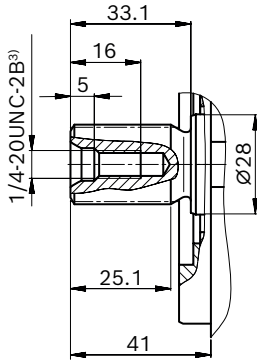

▼ **Splined shaft 7/8 in (similar to ISO 3019-1)**

W – 13T 16/32DP[1)2)]

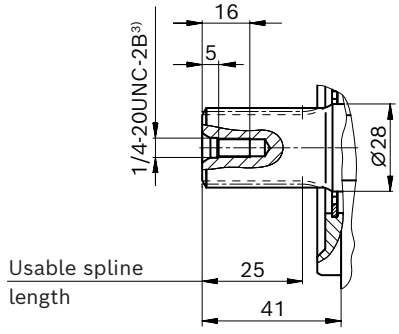

Ports - version metric port plate 11/12		**Standard**	**Size**	p_{max} **[bar (psi)]**[4)]	**State**[7)]
B	Working port (standard pressure series) Fastening thread	ISO 6162-1 DIN 13	1 in M10 × 1.5; 17 (0.67) deep	350 (5100)	O
S	Suction port (standard pressure series) Fastening thread	ISO 6162-1 DIN 13	1 1/2 in M12 × 1.75; 20 (0.79) deep	10 (145)	O
L	Drain port	DIN 3852[5)]	M22 × 1.5; 14 (0.55) deep	2 (30)	O[6)]
L_1	Drain port	ISO 11926[5)]	7/8-14 UNF-2B; 17 (0.67) deep	2 (30)	X[6)]
X	Pilot pressure	DIN 3852	M14 × 1.5; 12 (0.47) deep	350 (5100)	O
X	Pilot pressure with DG-control	DIN 3852-2	G1/4 in; 12 (0.47) deep	350 (5100)	O

Ports - version SAE port plate 61/62		**Standard**	**Size**	p_{max} **[bar (psi)]**[4)]	**State**[7)]
B	Working port (standard pressure series) Fastening thread	ISO 6162-1 ASME B1.1	1 in 3/8-16 UNC-2B; 17 (0.67) deep	350 (5100)	O
S	Suction port (standard pressure series) Fastening thread	ISO 6162-1 ASME B1.1	1 1/2 in 1/2-13 UNC-2B; 20 (0.79) deep	10 (145)	O
L	Drain port	ISO 11926[5)]	7/8-14 UNF-2B; 17 (0.67) deep	2 (30)	O[6)]
L_1	Drain port	ISO 11926[5)]	7/8-14 UNF-2B; 17 (0.67) deep	2 (30)	X[6)]
X	Pilot pressure	ISO 11926	7/16-20 UNF-2B; 11.5 (0.45) deep	350 (5100)	O
X	Pilot pressure with DG-control	DIN 3852-2	G1/4 in; 12 (0.47) deep	350 (5100)	O

1) Involute spline according to ANSI B92.1a, 30° pressure angle, flat root, side fit, tolerance class 5
2) Splines according to ANSI B92.1a, spline runout is a deviation from standard ISO 3019-1.
3) Thread according to ASME B1.1
4) Depending on the application, momentary pressure peaks can occur. Keep this in mind when selecting measuring devices and fittings.
5) The countersink may be deeper than specified in the standard.
6) Depending on the installation position, L or L_1 must be connected (also see installation instructions on page 57).
7) O = Must be connected (plugged on delivery)
X = Plugged (in normal operation)

▼ **DG – Two-point control, direct operated**

Port plate 11 (61)

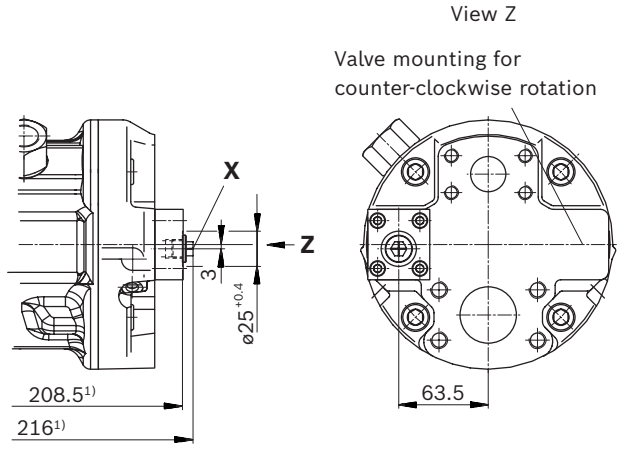

▼ **DG – Two-point control, direct operated**

Port plate 12 (62)

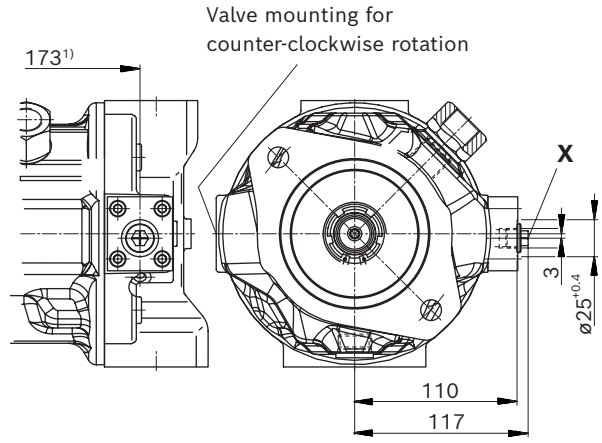

▼ **DR – Pressure controller**

Port plate 11 (61)

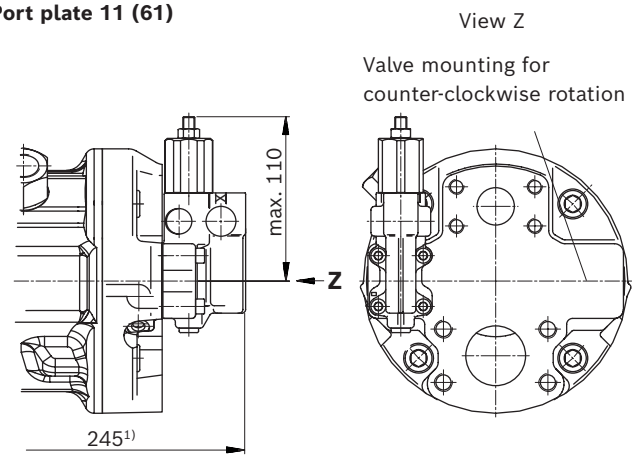

▼ **DR – Pressure controller**

Port plate 12 (62)

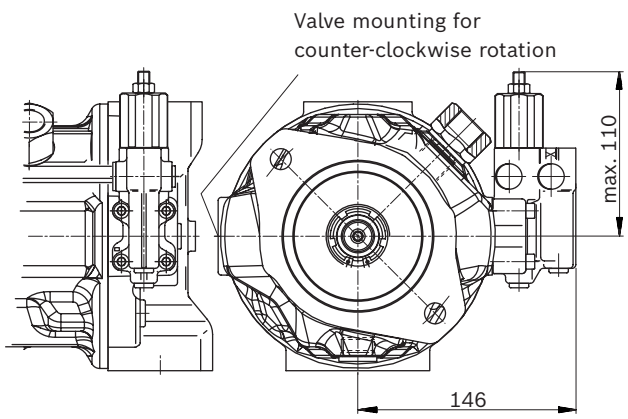

▼ **DRG – Pressure controller, remote controlled**

Port plate 11 (61)

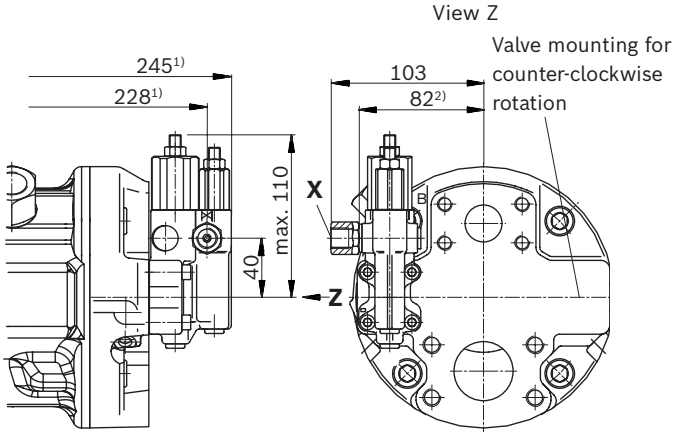

▼ **DRG – Pressure controller, remote controlled**

Port plate 12 (62)

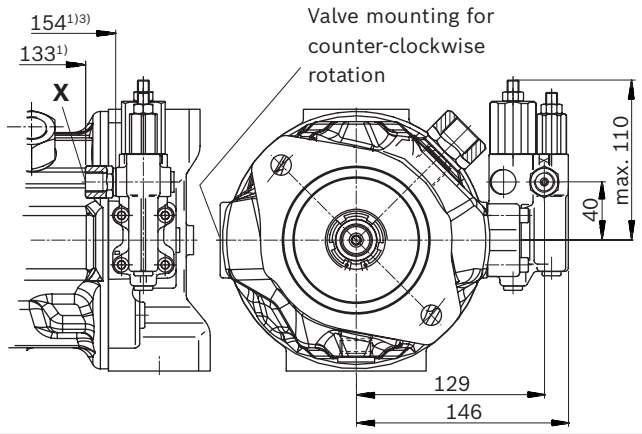

1) To flange surface
2) For version with port plate 61
3) For version with port plate 62

▼ **DFLR – Pressure, flow and power controller**

Port plate 11 (61)

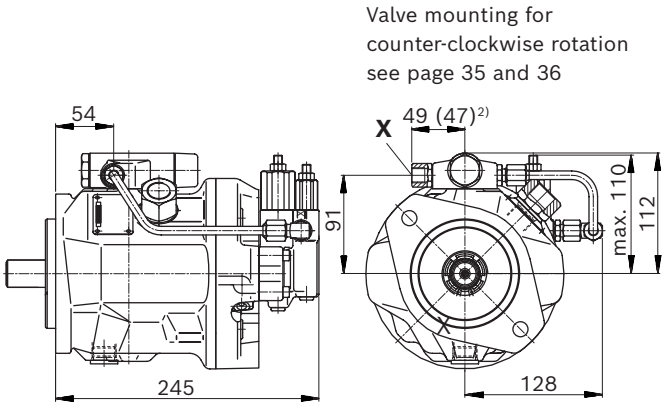

▼ **DFLR – Pressure, flow and power controller**

Port plate 12 (62)

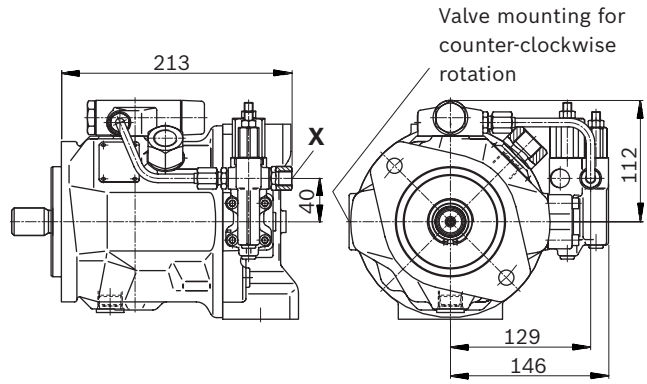

▼ **ED7. / ER7. – Electrohydraulic pressure control**

Port plate 11 (61)

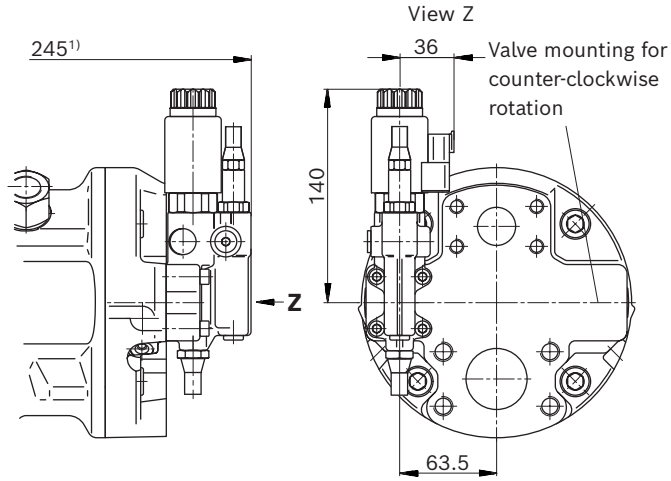

▼ **ED7. / ER7. – Electrohydraulic pressure control**

Port plate 12 (62)

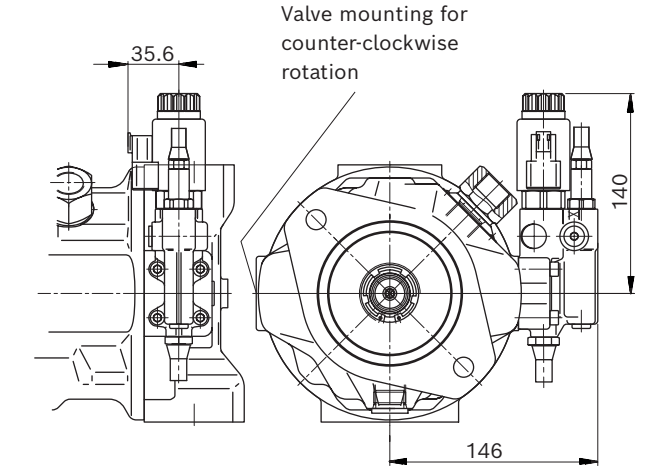

▼ **EC4/EB4 – Electrohydraulic control valve**

Port plate 11 (61)

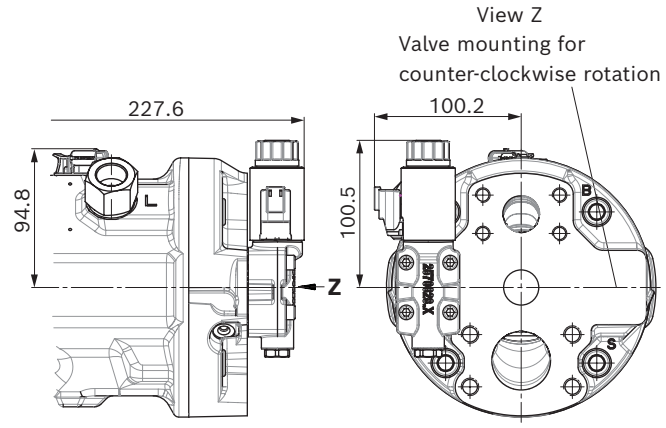

▼ **EC4/EB4 – EC4/EB4 – Electrohydraulic control valve**

Port plate 12 (62)

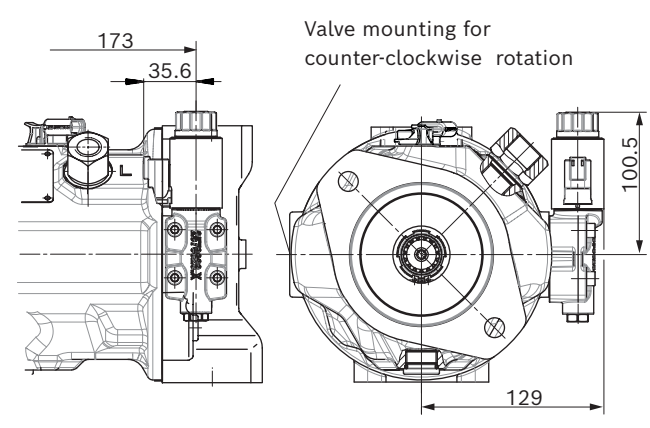

1) To flange surface
2) For version with port plate 61

Dimensions, sizes 71 and 88

DFR / DFR1 / DRSC – Pressure flow controller, hydraulic; clockwise rotation, version: Ports metric

▼ **Port plate 42**

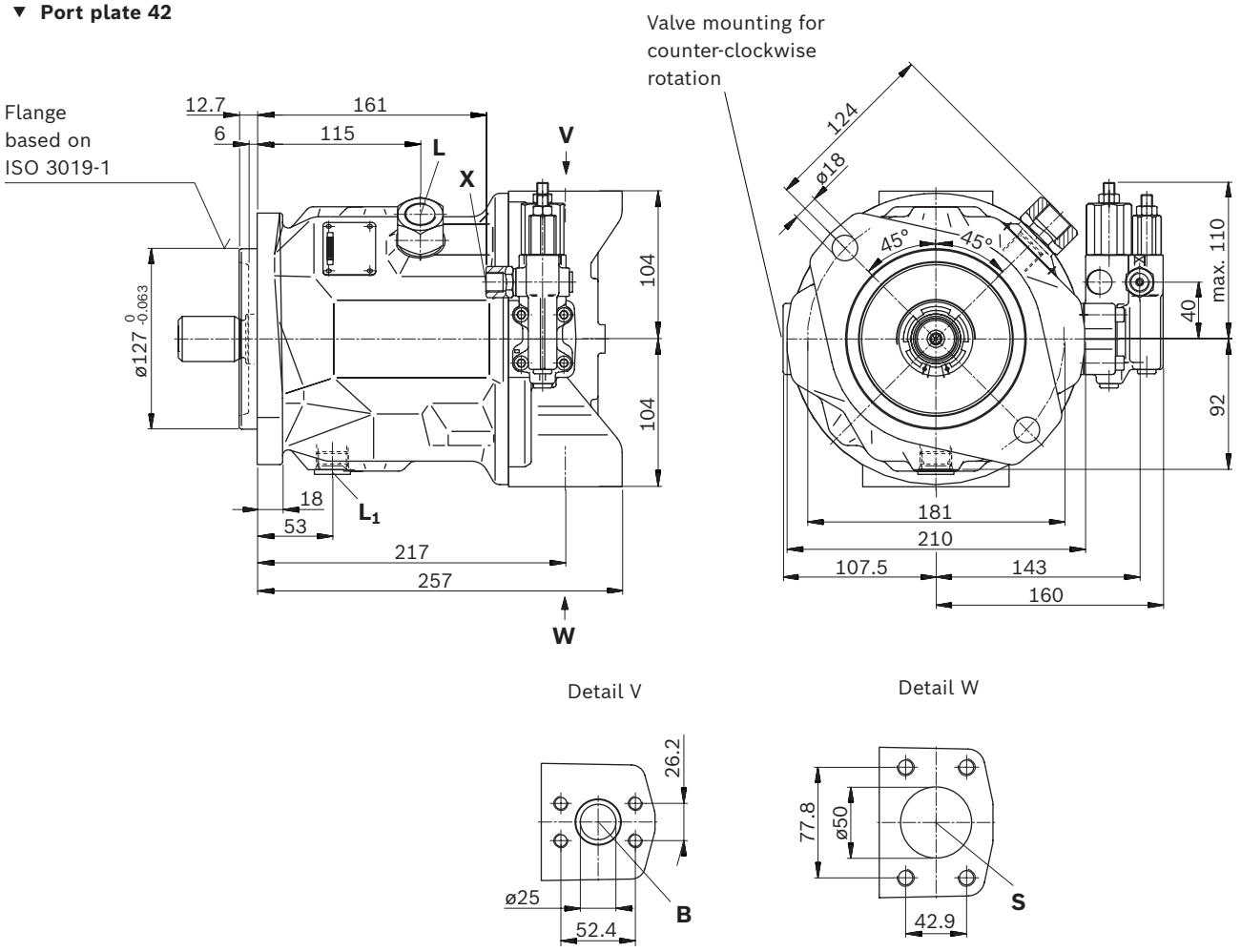

▼ **Port plate 41**

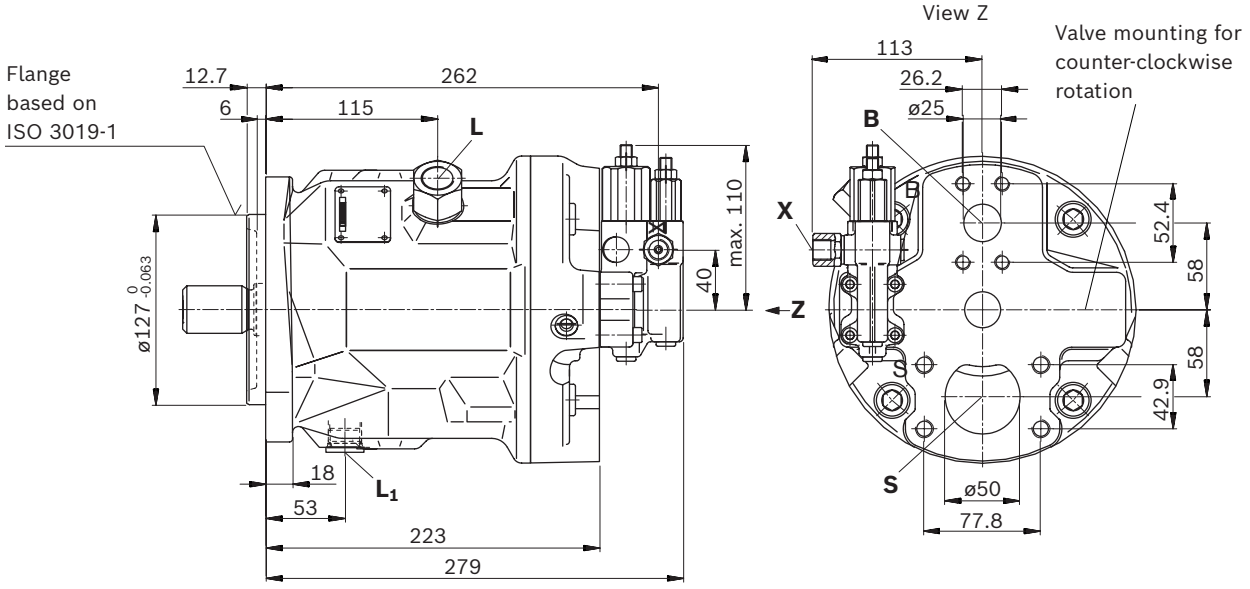

Dimensions, sizes 71 and 88

DFR / DFR1 / DRSC – Pressure flow controller, hydraulic; clockwise rotation, version: SAE ports

▼ **Port plate 92**

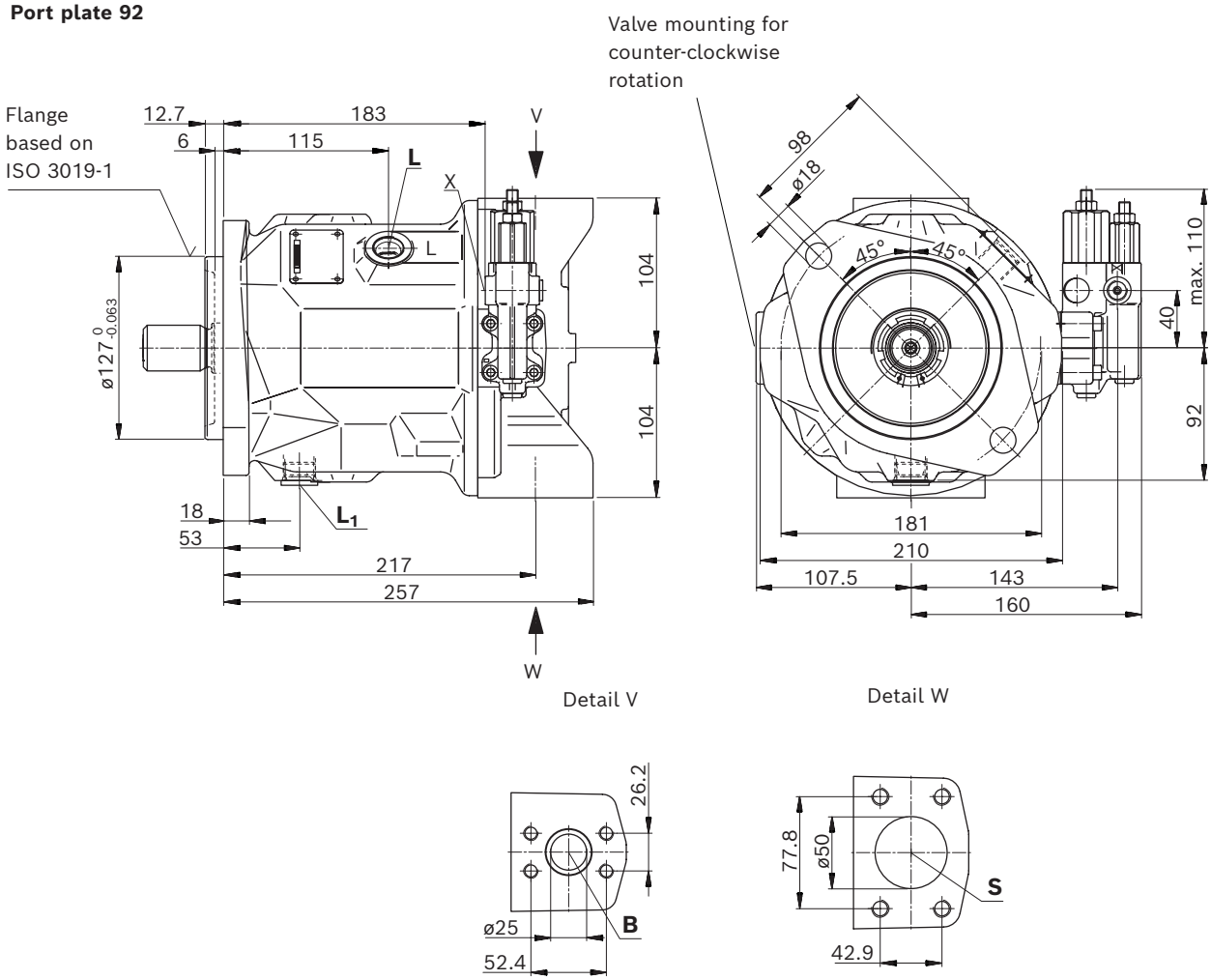

▼ **Port plate 91**

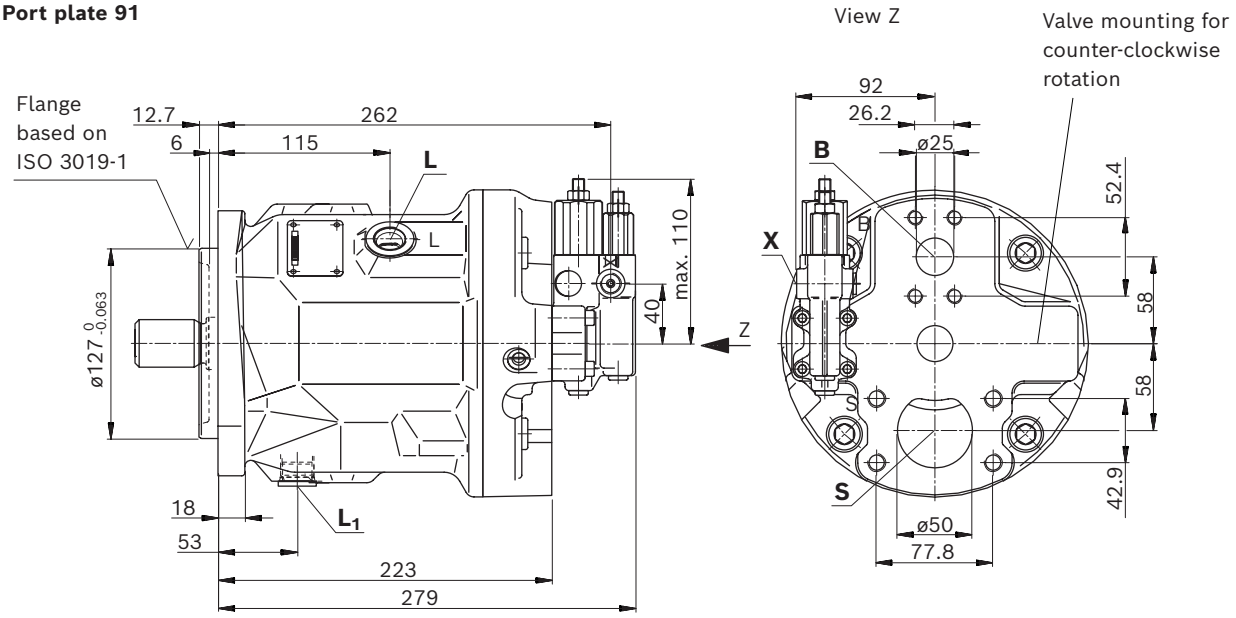

▼ **Splined shaft 1 1/4 in (32-4, ISO 3019-1)**

S – 14T 12/24DP[1)]

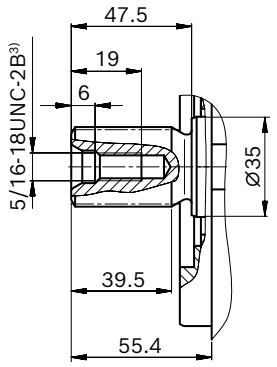

▼ **Splined shaft 1 1/4 in (similar to ISO 3019-1)**

R – 14T 12/24DP[1)2)]

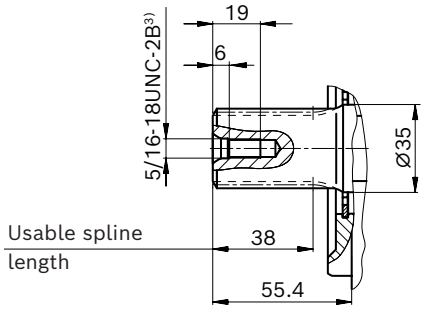

▼ **Splined shaft 1 in (25-4, ISO 3019-1)**

U – 15T 16/32DP[1)]

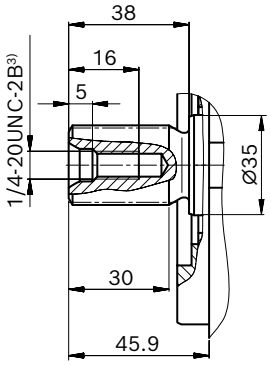

▼ **Splined shaft 1 in (similar to ISO 3019-1)**

W – 15T 16/32DP[1)2)]

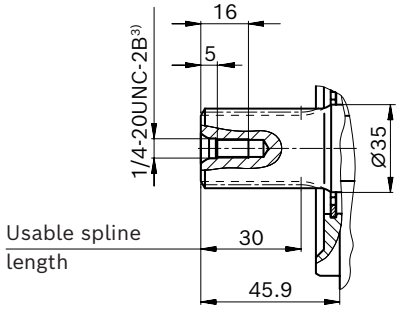

Ports - version metric port plate 41/42		**Standard**	**Size**	p_{max} **[bar (psi)]**[4)]	**State**[7)]
B	Working port (standard pressure series) Fastening thread	ISO 6162-1 DIN 13	1 in M10 × 1.5; 17 (0.67) deep	350 (5100)	O
S	Suction port (standard pressure series) Fastening thread	ISO 6162-1 DIN 13	2 in M12 × 1.75; 20 (0.79) deep	10 (145)	O
L	Drain port	DIN 3852[5)]	M22 × 1.5; 14 (0.55) deep	2 (30)	O[6)]
L_1	Drain port	ISO 11926[5)]	7/8-14 UNF-2B; 17 (0.67) deep	2 (30)	X[6)]
X	Pilot pressure	DIN 3852	M14 × 1.5; 12 (0.47) deep	350 (5100)	O
X	Pilot pressure with DG-control	DIN 3852-2	G1/4 in; 12 (0.47) deep	350 (5100)	O

Ports - version SAE port plate 91/92		**Standard**	**Size**[4)]	p_{max} **[bar (psi)]**[4)]	**State**[7)]
B	Working port (standard pressure series) Fastening thread	ISO 6162-1 ASME B1.1	1 in 3/8-16 UNC-2B; 18 (0.71) deep	350 (5100)	O
S	Suction port (standard pressure series) Fastening thread	ISO 6162-1 ASME B1.1	2 in 1/2-13 UNC-2B; 22 (0.87) deep	10 (145)	O
L	Drain port	ISO 11926[5)]	7/8-14 UNF-2B; 17 (0.67) deep	2 (30)	O[6)]
L_1	Drain port	ISO 11926[5)]	7/8-14 UNF-2B; 17 (0.67) deep	2 (30)	X[6)]
X	Pilot pressure	ISO 11926	7/16-20 UNF-2B; 11.5 (0.45) deep	350 (5100)	O
X	Pilot pressure with DG-control	DIN 3852-2	G1/4 in; 12 (0.47) deep	350 (5100)	O

1) Involute spline according to ANSI B92.1a, 30° pressure angle, flat root, side fit, tolerance class 5
2) Splines according to ANSI B92.1a, spline runout is a deviation from standard ISO 3019-1.
3) Thread according to ASME B1.1
4) Depending on the application, momentary pressure peaks can occur. Keep this in mind when selecting measuring devices and fittings.
5) The countersink may be deeper than specified in the standard.
6) Depending on the installation position, L or L_1 must be connected (also see installation instructions on page 57).
7) O = Must be connected (plugged on delivery)
X = Plugged (in normal operation)

▼ **DG – Two-point control, direct operated**

Port plate 41 (91)

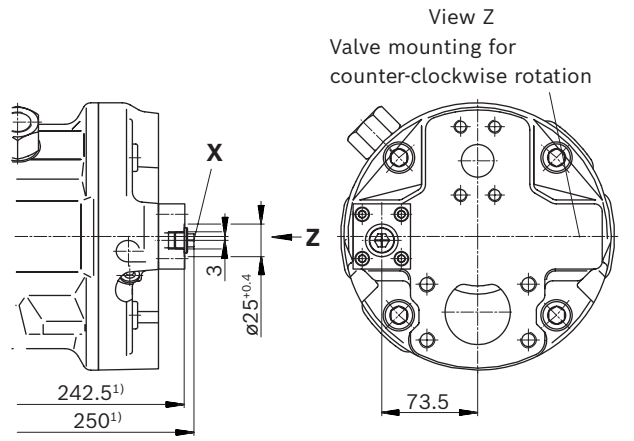

▼ **DG – Two-point control, direct operated**

Port plate 42 (92)

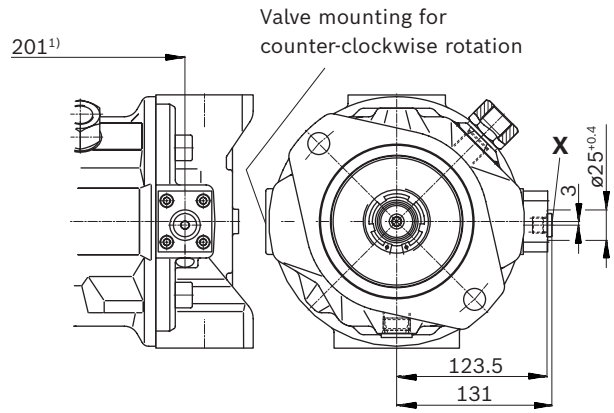

▼ **DR – Pressure controller**

Port plate 41 (91)

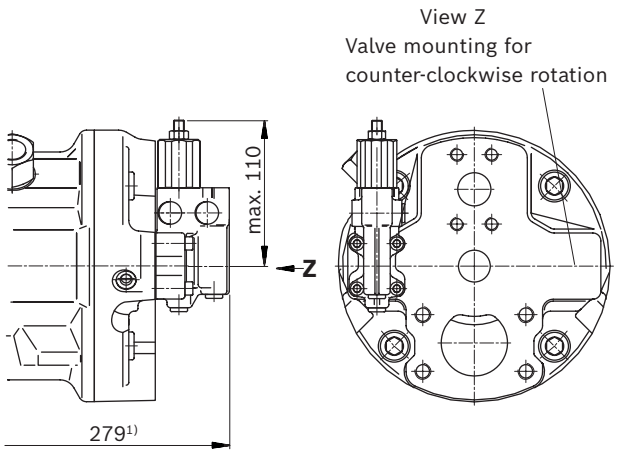

▼ **DR – Pressure controller**

Port plate 42 (92)

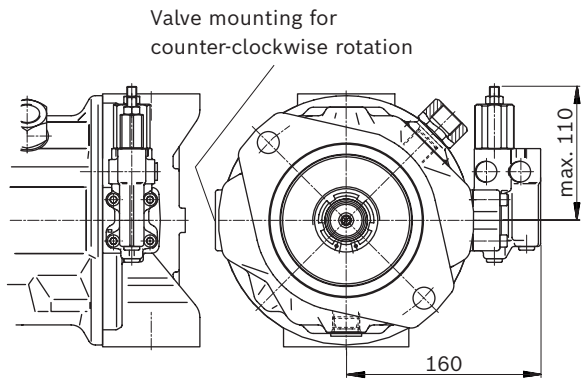

▼ **DRG – Pressure controller, remote controlled**

Port plate 41 (91)

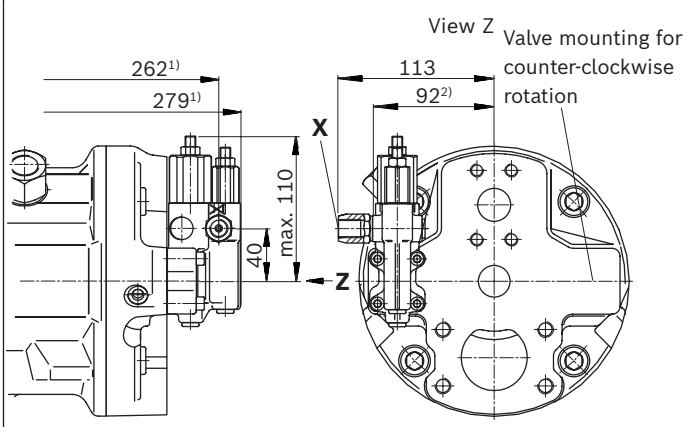

▼ **DRG – Pressure controller, remote controlled**

Port plate 42 (92)

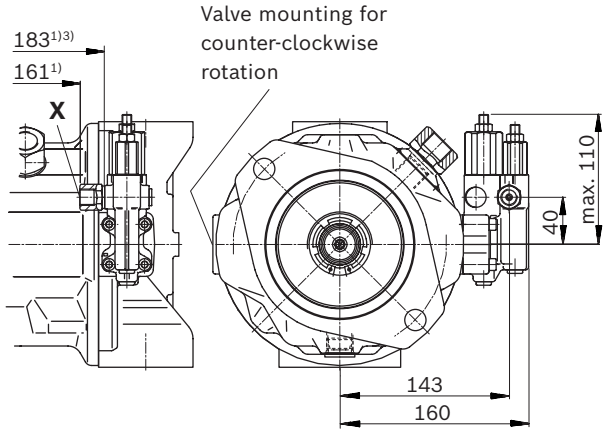

1) To flange surface
2) For version with port plate 91
3) For version with port plate 92

▼ **DFLR – Pressure, flow and power controller**

Port plate 41 (91)

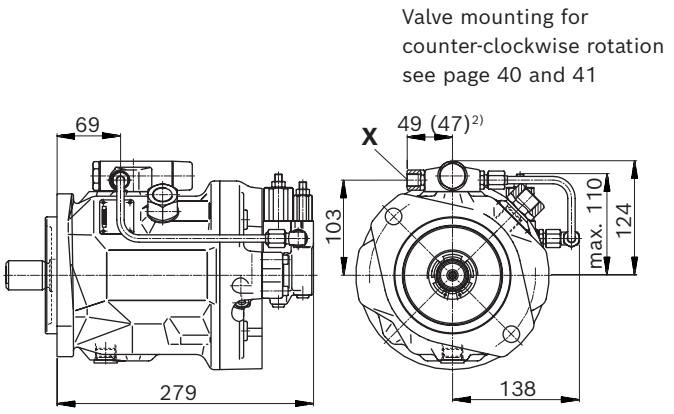

▼ **DFLR – Pressure, flow and power controller**

Port plate 42 (92)

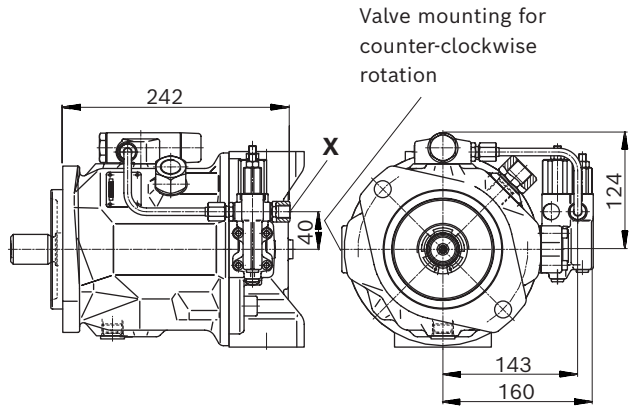

▼ **ED7. / ER7. – Electrohydraulic pressure control**

Port plate 41 (91)

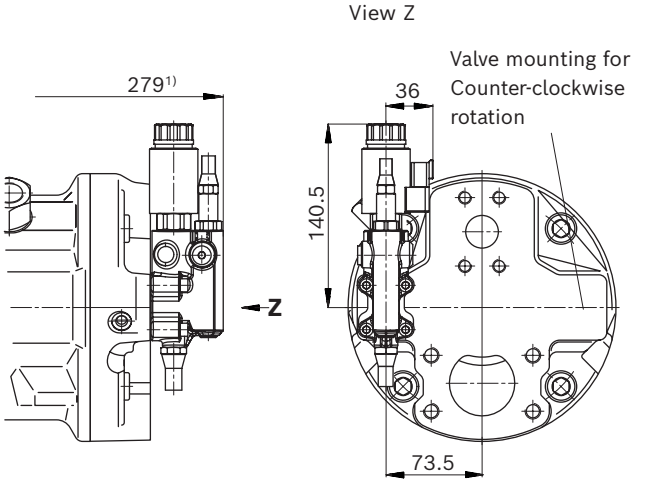

▼ **ED7. / ER7. – Electrohydraulic pressure control**

Port plate 42 (92)

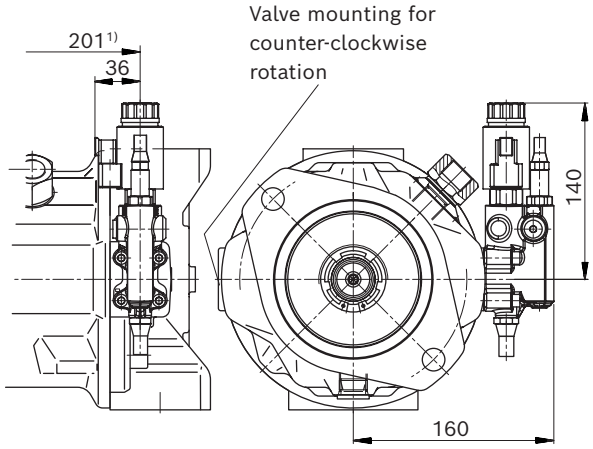

▼ **EC4/EB4 – Electrohydraulic control valve**

Port plate 41 (91)

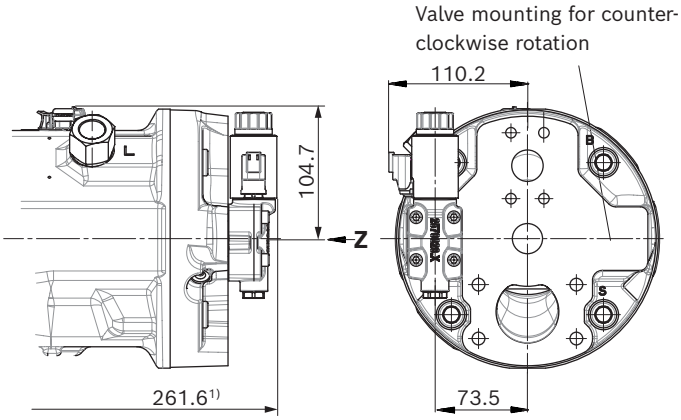

▼ **EC4/EB4 – Electrohydraulic control valve**

Port plate 42 (92)

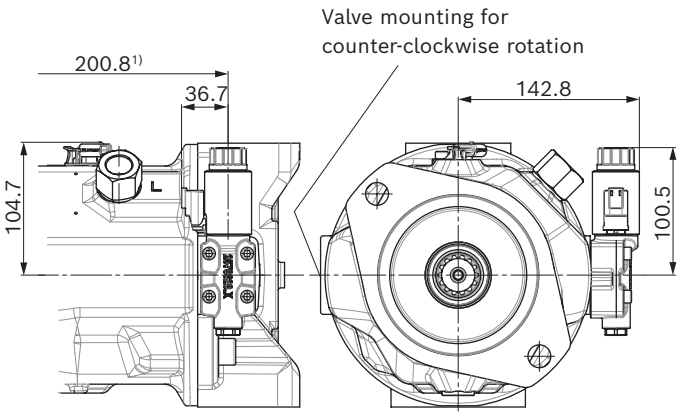

1) To flange surface
2) For version with port plate 91

Dimensions, size 100

DFR / DFR1 / DRSC – Pressure flow controller, hydraulic; clockwise rotation, version: Ports metric

▼ **Port plate 12**

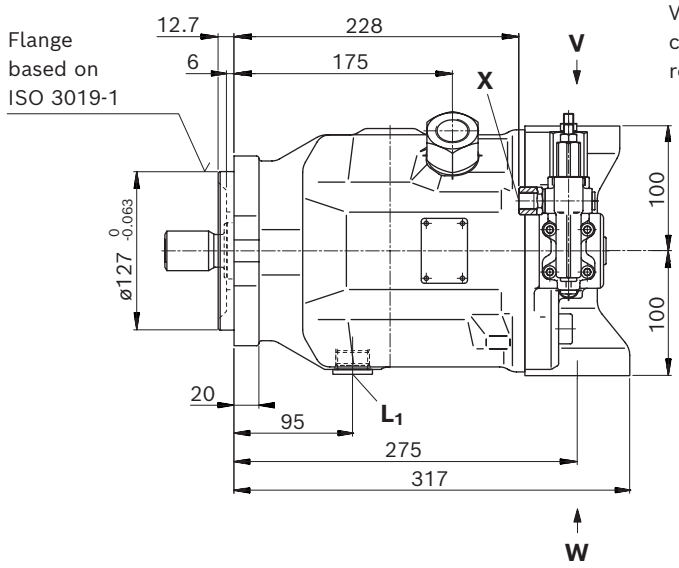

▼ **Mounting flange C**

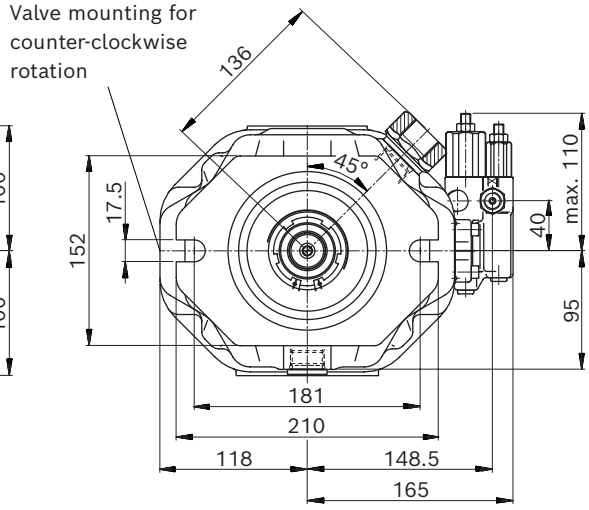

Detail V

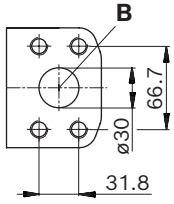

Detail W

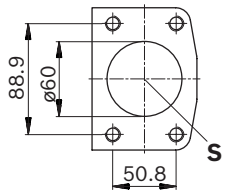

▼ **Mounting flange D**

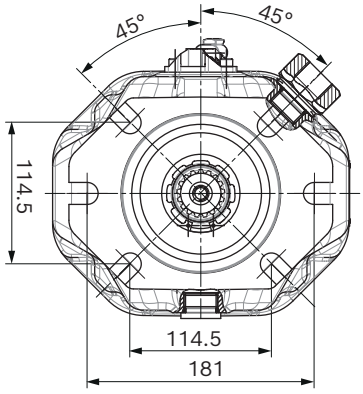

View Z

▼ **Port plate 11**

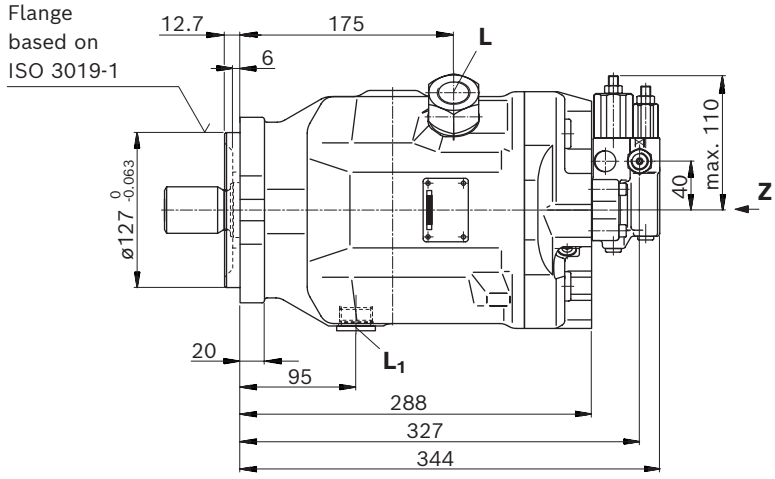

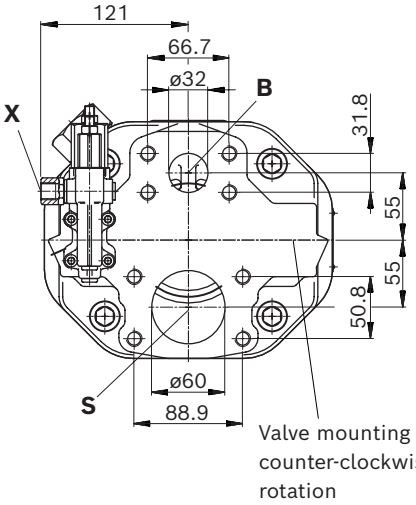

Dimensions, size 100

DFR / DFR1 / DRSC – Pressure flow controller, hydraulic; clockwise rotation, version: SAE ports

▼ **Port plate 62**

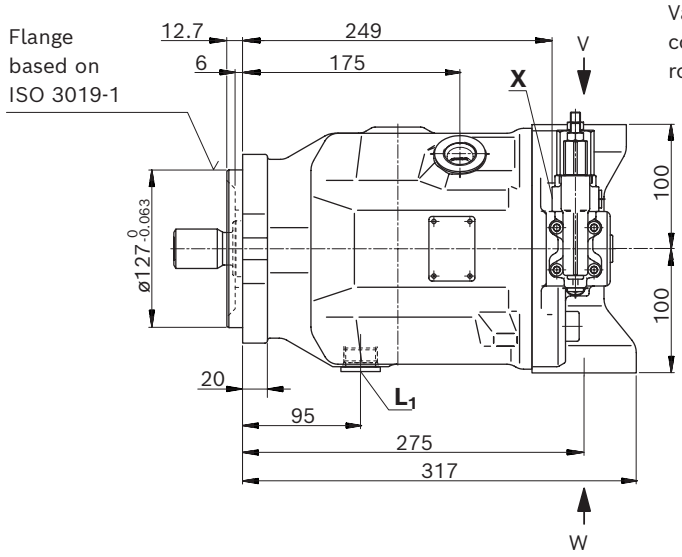

▼ **Mounting flange C**

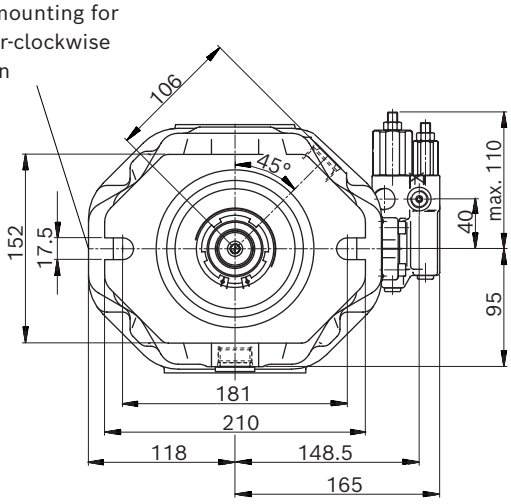

▼ **Mounting flange D**

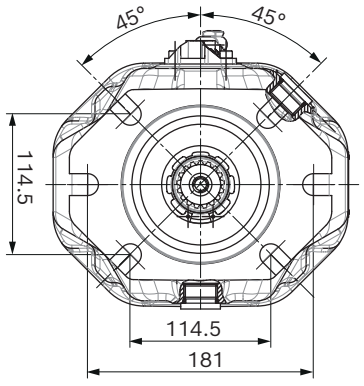

Detail V

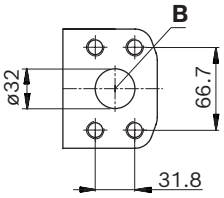

Detail W

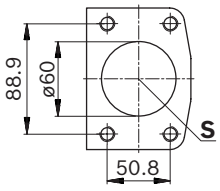

▼ **Port plate 61**

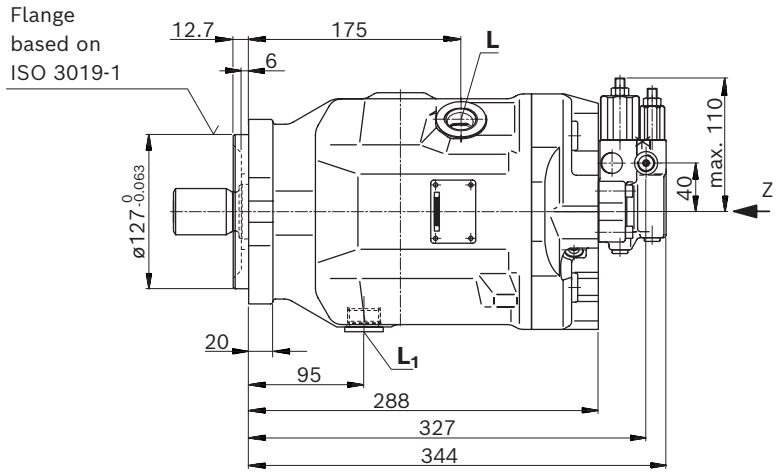

View Z

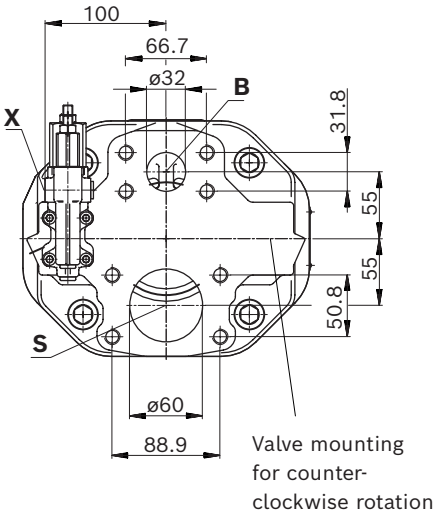

▼ **Splined shaft 1 1/2 in (38-4, ISO 3019-1)**

S – 17T 12/24DP[1)]

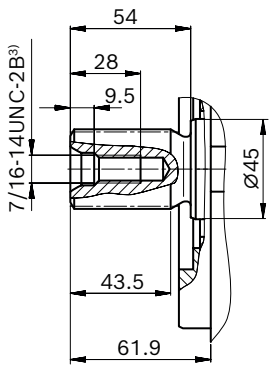

▼ **Splined shaft 1 1/4 in (32-4, ISO 3019-1)**

U – 14T 12/24DP[1)]

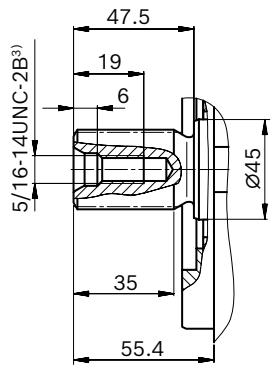

▼ **Splined shaft 1 1/4 in (similar to ISO 3019-1)**

W – 14T 12/24DP[1)2)]

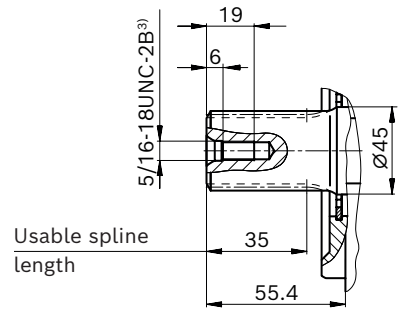

Ports - version metric port plate 11/12		**Standard**	**Size**	p_{max} [bar (psi)][4)]	**State**[7)]
B	Working port (high-pressure series) Fastening thread	ISO 6162-2 DIN 13	1 1/4 in M14 × 2[8)]; 19 (0.75) deep	350 (5100)	O
S	Suction port (standard pressure series) Fastening thread	ISO 6162-1 DIN 13	2 1/2 in M12 × 1.75; 17 (0.67) deep	10 (145)	O
L	Drain port	DIN 3852[5)]	M27 × 2; 16 (0.63) deep	2 (30)	O[6)]
L_1	Drain port	ISO 11926[5)]	1 1/16-12 UNF-2B; 20 (0.79) deep	2 (30)	X[6)]
X	Pilot pressure	DIN 3852	M14 × 1.5; 12 (0.47) deep	350 (5100)	O
X	Pilot pressure with DG-control	DIN 3852-2	G1/4 in; 12 (0.47) deep	350 (5100)	O

Ports - version SAE port plate 61/62		**Standard**	**Size**	p_{max} [bar (psi)][4)]	**State**[7)]
B	Working port (high-pressure series) Fastening thread	ISO 6162-2 ASME B1.1	1 1/4 in 1/2-13 UNC-2B; 19 (0.75) deep	350 (5100)	O
S	Suction port (standard pressure series) Fastening thread	ISO 6162-1 ASME B1.1	2 1/2 in 1/2-13 UNC-2B; 27 (1.06) deep	10 (145)	O
L	Drain port	ISO 11926[5)]	1 1/16-12 UNF-2B; 20 (0.79) deep	2 (30)	O[6)]
L_1	Drain port	ISO 11926[5)]	1 1/16-12 UNF-2B; 20 (0.79) deep	2 (30)	X[6)]
X	Pilot pressure	ISO 11926	7/16-20 UNF-2B; 11.5 (0.45) deep	350 (5100)	O
X	Pilot pressure with DG-control	DIN 3852-2	G1/4 in; 12 (0.47) deep	350 (5100)	O

1) Involute spline according to ANSI B92.1a, 30° pressure angle, flat root, side fit, tolerance class 5
2) Splines according to ANSI B92.1a, spline runout is a deviation from standard ISO 3019-1.
3) Thread according to ASME B1.1
4) Depending on the application, momentary pressure peaks can occur. Keep this in mind when selecting measuring devices and fittings.
5) The countersink may be deeper than specified in the standard.
6) Depending on the installation position, L or L_1 must be connected (also see installation instructions on page 57).
7) O = Must be connected (plugged on delivery)
X = Plugged (in normal operation)
8) Fastening thread M14 deviating from standard ISO 6162-2

▼ **DG – Two-point control, direct operated**

Port plate 11 (61)

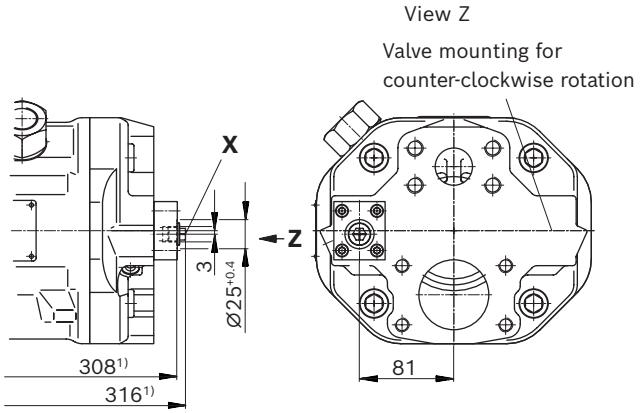

▼ **DG – Two-point control, direct operated**

Port plate 12 (62)

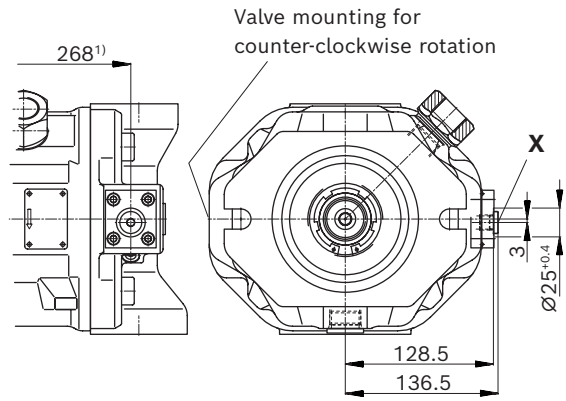

▼ **DR – Pressure controller**

Port plate 11 (61)

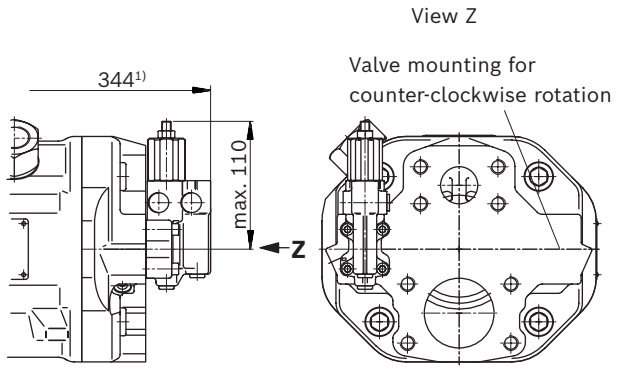

▼ **DR – Pressure controller**

Port plate 12 (62)

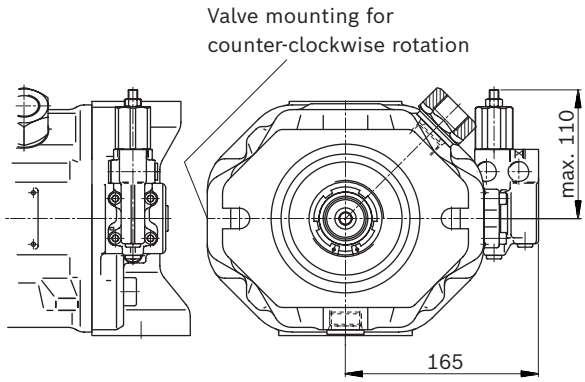

▼ **DRG – Pressure controller, remote controlled**

Port plate 11 (61)

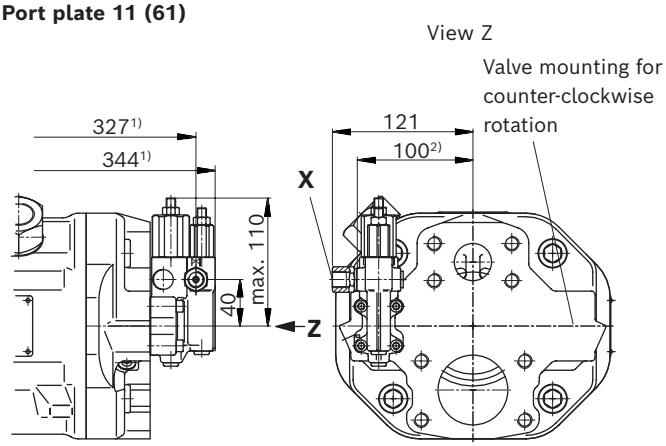

▼ **DRG – Pressure controller, remote controlled**

Port plate 12 (62)

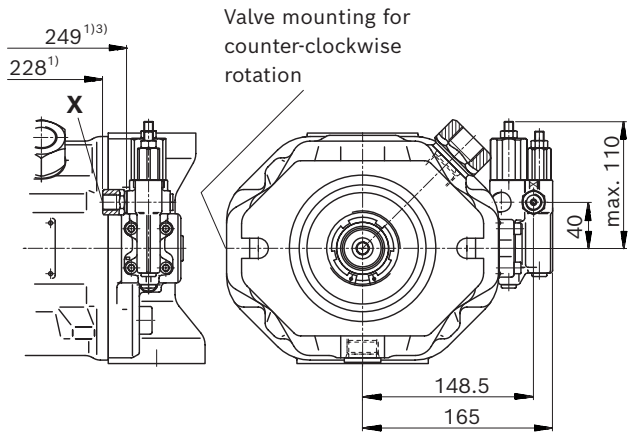

1) To flange surface
2) For version with port plate 61
3) For version with port plate 62

▼ **DFLR – Pressure, flow and power controller**

Port plate 11 (61)

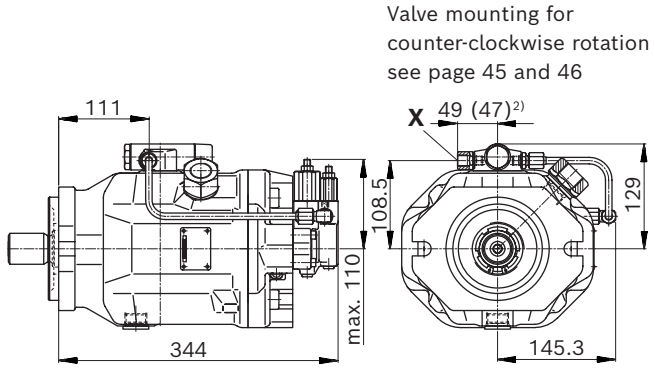

▼ **DFLR – Pressure, flow and power controller**

Port plate 12 (62)

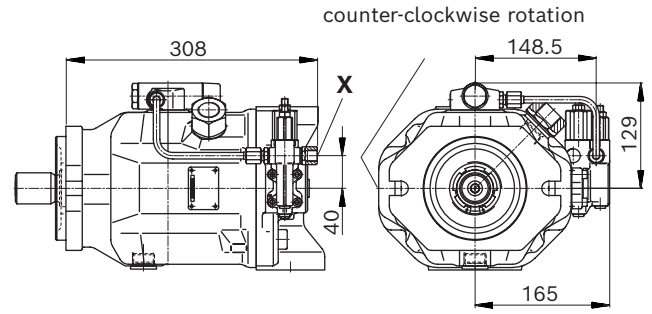

▼ **ED7. / ER7. – Electrohydraulic pressure control**

Port plate 11 (61)

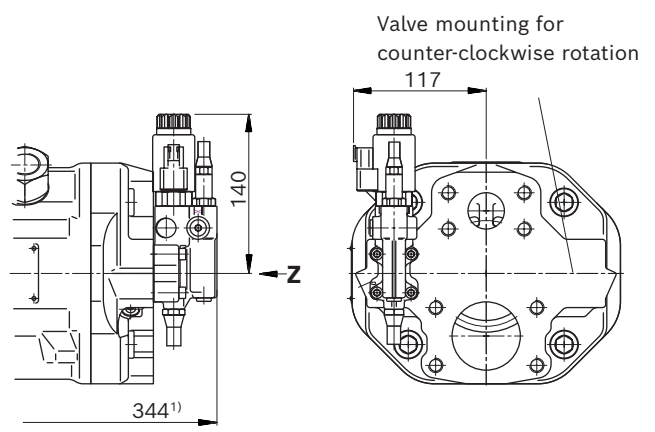

▼ **ED7. / ER7. – Electrohydraulic pressure control**

Port plate 12 (62)

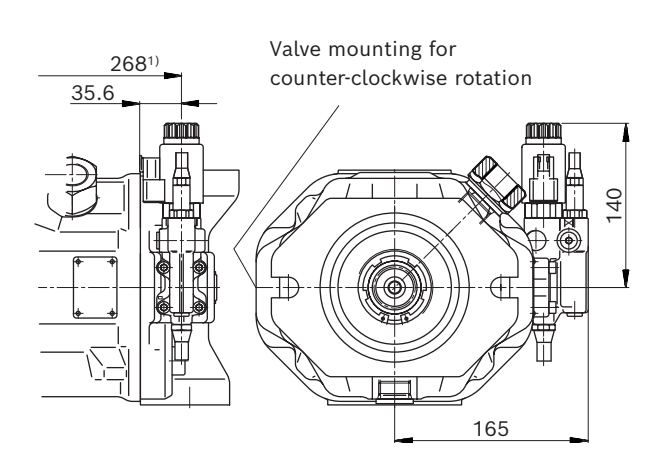

▼ **EC4/EB4 – Electrohydraulic control valve**

Port plate 11 (61)

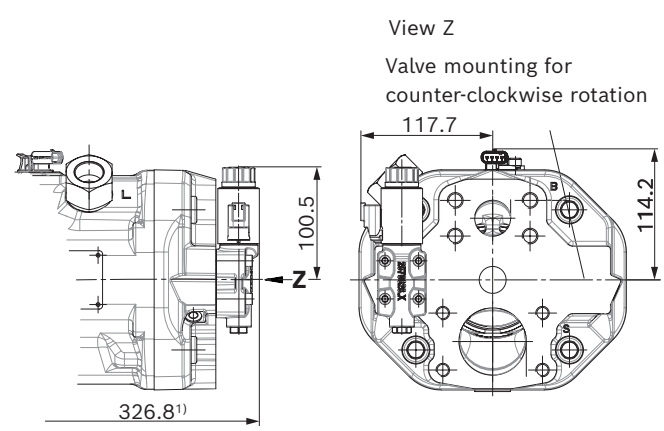

▼ **EC4/EB4 – Electrohydraulic control valve**

Port plate 12 (62)

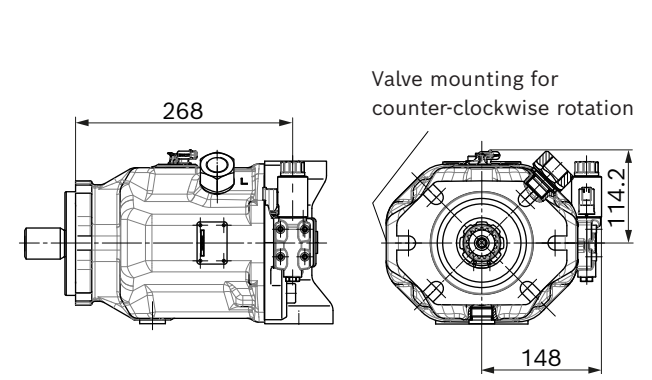

1) To flange surface
2) For version with port plate 61

Dimensions, through drive

For flanges and shafts according to ISO 3019-1

Flange		Hub for splined shaft[1]		Availability across sizes						Code
Diameter	Mounting[4]	Diameter		18	28	45	71	88	100	
82-2 (A)		5/8 in	9T 16/32DP	●	●	●	●	●	●	K01
		3/4 in	11T 16/32DP	●	●	●	●	●	●	K52

● = Available – = Not available

▼ **82-2**

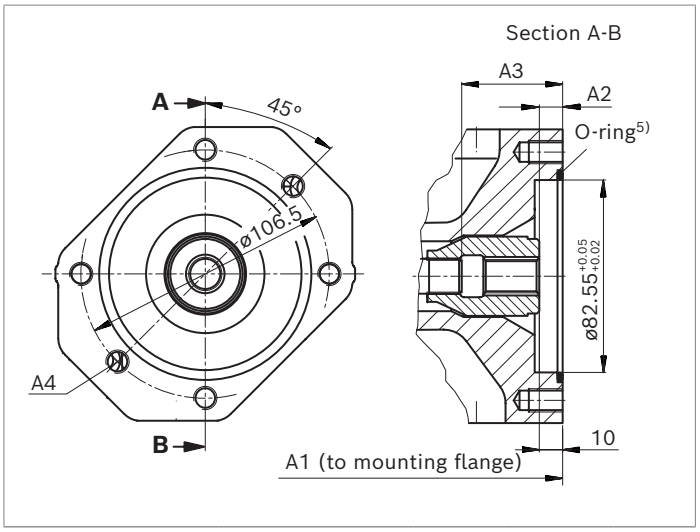

▼ **82-2**

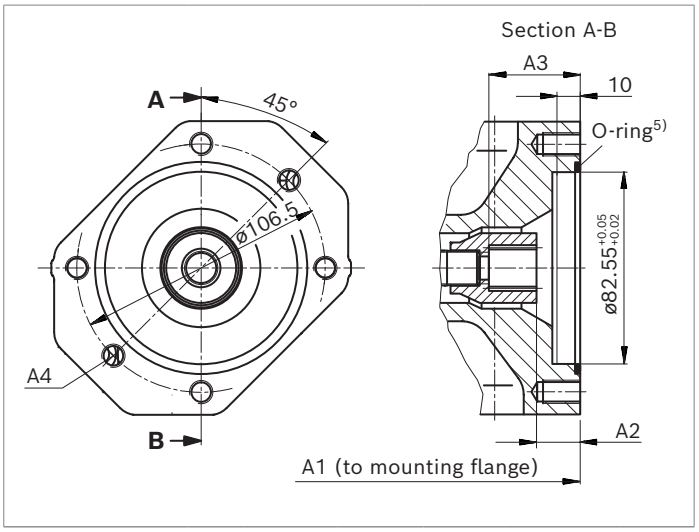

K01 (16-4 (A))	NG	A1	A2[3]	A3[3]	A4[2)6)]
	18	182	9.3	42.5	M10×1.5;
		(7.17)	(0.37)	(1.67)	14.5 (0.57) deep
	28	204	9.2	36.2	M10×1.5;
		(8.03)	(0.36)	(1.43)	16 (0.63) deep
	45	229	10.1	52.7	M10×1.5;
		(9.02)	(0.40)	(2.07)	16 (0.63) deep
	71	267	11.2	60.6	M10×1.5;
		(10.50)	(0.44)	(2.39)	20 (0.79) deep
	88	267	11.2	60.6	M10×1.5;
		(10.50)	(0.44)	(2.39)	20 (0.79) deep
	100	338	8.8	33.1	M10×1.5;
		(13.30)	(0.35)	(1.30)	16 (0.63) deep

K52 (19-4 (A-B))	NG	A1	A2[3]	A3[3]	A4[2)6)]
	18	182	18.3	39.2	M10×1.5;
		(7.17)	(0.72)	(1.54)	14.5 (0.57) deep
	28	204	18.4	39.4	M10×1.5;
		(8.03)	(0.72)	(1.55)	16 (0.63) deep
	45	229	18.4	38.8	M10×1.5;
		(9.02)	(0.72)	(1.53)	16 (0.63) deep
	71	267	20.8	41.2	M10×1.5;
		(10.50)	(0.82)	(1.62)	20 (0.79) deep
	88	267	20.8	41.2	M10×1.5;
		(10.50)	(0.82)	(1.62)	20 (0.79) deep
	100	338	18.6	39.6	M10×1.5;
		(13.30)	(0.73)	(1.56)	16 (0.63) deep

1) According to ANSI B92.1a, 30° pressure angle, flat root, side fit, tolerance class 5
2) Thread according to DIN 13
3) Minimum dimensions
4) Mounting holes pattern viewed on through drive with control at top
5) O-ring included in the scope of delivery
6) Design recommended according to VDI 2230, screw quality 8.8 according to ISO 898-1

For flanges and shafts according to ISO 3019-1

Flange		Hub for splined shaft[1]		Availability across sizes						Code
Diameter	**Mounting[5]**	**Diameter**		**18**	**28**	**45**	**71**	**88**	**100**	
101-2 (B)	⚲, ⚲, ⚲	7/8 in	13T 16/32DP	–	●	●	●	●	●	K68
		1 in	15T 16/32DP	–	–	●	●	●	●	K04

● = Available – = Not available

▼ **101-2**

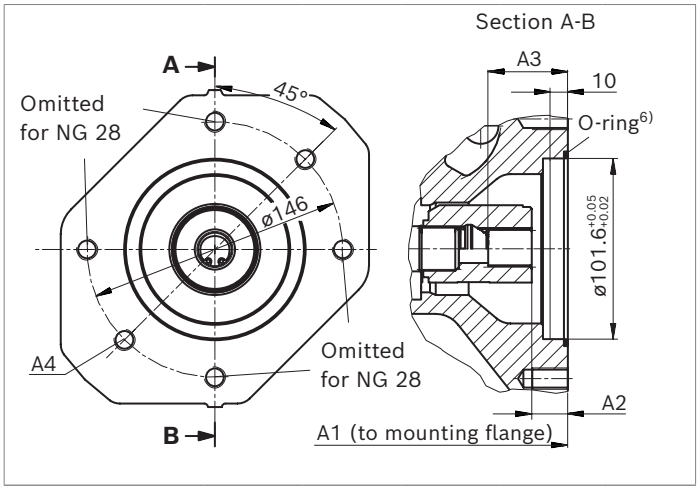

▼ **101-2**

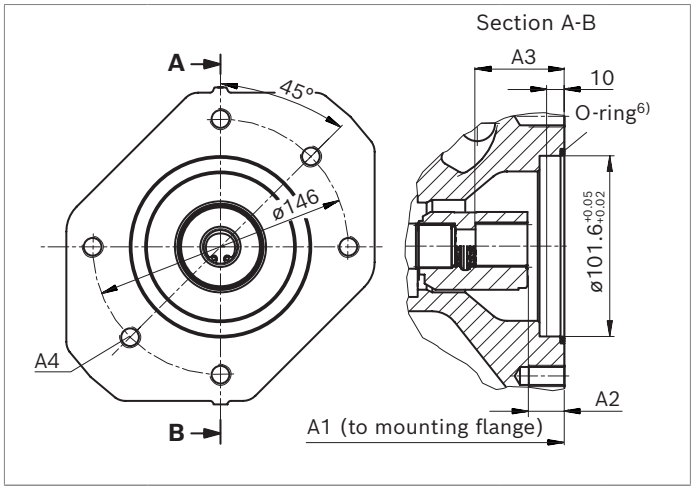

K68 (22-4 (B))	NG	A1	A2[4]	A3[4]	A4[2)7)]
	28	204	17.4	42.4	M12×1.75[3]
		(8.03)	(0.68)	(1.67)	
	45	229	17.4	41.8	M12×1.75;
		(9.02)	(0.68)	(1.65)	18 (0.71) deep
	71	267	19.8	44.2	M12×1.75;
		(10.50)	(0.78)	(1.74)	20 (0.79) deep
	88	267	19.8	44.2	M12×1.75;
		(10.50)	(0.78)	(1.74)	20 (0.79) deep
	100	338	17.6	41.9	M12×1.75;
		(13.30)	(0.69)	(1.65)	20 (0.79) deep

K04 (25-4 (B-B))	NG	A1	A2[4]	A3[4]	A4[2)7)]
	45	229	17.9	47.4	M12×1.75;
		(9.02)	(0.70)	(1.87)	18 (0.71) deep
	71	267	20.3	49.2	M12×1.75;
		(10.50)	(0.80)	(1.94)	20 (0.79) deep
	88	267	20.3	49.2	M12×1.75;
		(10.50)	(0.80)	(1.94)	20 (0.79) deep
	100	338	17.8	46.6	M12×1.75;
		(13.30)	(0.70)	(1.83)	20 (0.79) deep

1) According to ANSI B92.1a, 30° pressure angle, flat root, side fit, tolerance class 5
2) Thread according to DIN 13
3) Continuous
4) Minimum dimensions
5) Mounting holes pattern viewed on through drive with control at top
6) O-ring included in the scope of delivery
7) Design recommended according to VDI 2230, screw quality 8.8 according to ISO 898-1

For flanges and shafts according to ISO 3019-1

Flange		Hub for splined shaft[1]		Availability across sizes						Code
Diameter	**Mounting[5]**	**Diameter**		**18**	**28**	**45**	**71**	**88**	**100**	
127-2 (C)	☍, ⚯	1 1/4 in	14T 12/24DP	–	–	–	●	●	●	K07
		1 1/2 in	17T 12/24DP	–	–	–	–	–	●	K24

● = Available – = Not available

▼ **127-2**

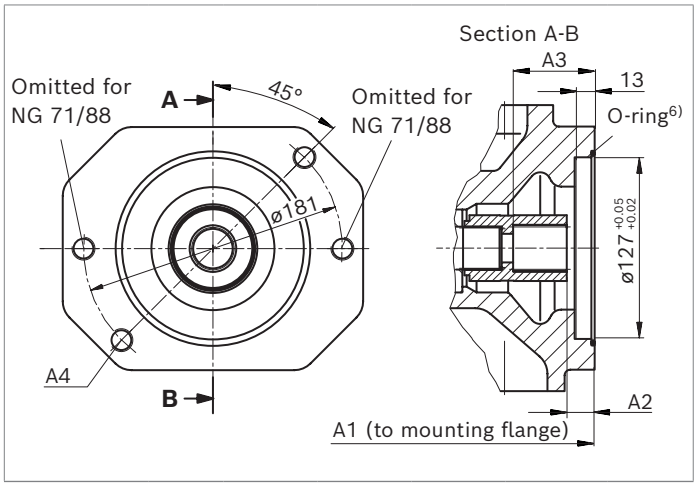

K07 (32-4 (C))	NG	A1	A2[4]	A3[4]	A4[2)7)]
	71	267	20.3	58.3	M16×2;[3]
		(10.50)	(0.80)	(2.30)	
	88	267	20.3	58.3	M16×2;[3]
		(10.50)	(0.80)	(2.30)	
	100	338	19.1	57.1	M16×2;[3]
		(13.30)	(0.75)	(2.25)	

▼ **127-2**

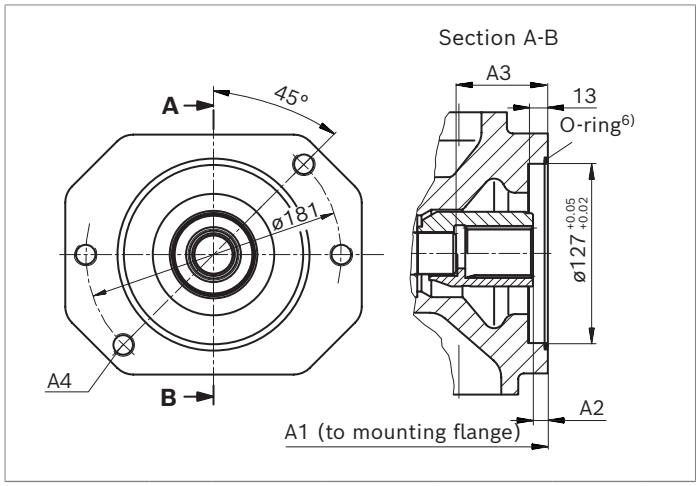

K24 (38-4 (C-C))	NG	A1	A2[4]	A3[4]	A4[2)7)]
	100	338	10.0	64.3	M16×2;[3]
		(13.30)	(0.39)	(2.53)	

1) According to ANSI B92.1a, 30° pressure angle, flat root, side fit, tolerance class 5
2) Thread according to DIN 13
3) Continuous
4) Minimum dimensions
5) Mounting holes pattern viewed on through drive with control at top
6) O-ring included in the scope of delivery
7) Design recommended according to VDI 2230, screw quality 8.8 according to ISO 898-1

Overview of mounting options

SAE – Mounting flange

Through drive			Mounting options – 2nd pump					
Flange ISO 3019-1	**Hub for splined shaft**	**Code**	**A10V(S)O/31 NG (shaft)**	**A10V(S)O/5x NG (shaft)**	**A10VO/60 NG (shaft)**	**A1VO/10 NG (shaft)**	**External gear pump design (NG)**	**Through drive available for NG**
82-2 (A)	5/8 in	K01	18 (U)	10 (U), 18 (U)			AZPF	18 to 100
	3/4 in	K52	18 (S, R)	10 (S) 18 (S, R)		18, 28 (S3)	–	18 to 100
101-2 (B)	7/8 in	K68	28 (S, R) 45 (U, W)[1]	28 (S, R) 45 (U, W)[1]	45 (S4)	28, 35 (S4)	Series N/G	28 to 100
	1 in	K04	45 (S, R) –	45 (S, R) 60, 63, 72 (U, W)[2]	45 (S5)	35 (S5)	–	45 to 100
127-2 (C)	1 1/4 in	K07	71 (S, R) 88 (S, R) 100 (U)[3]	60, 63 (S, R) 85 (U)[3] 100 (U)[3]			–	71 to 100
	1 1/2 in	K24	100 (S)	85 (S) 100 (S)			–	100

1) Not for main pump NG28 with K68
2) Not for main pump NG45 with K04
3) Not for main pump NG71 and NG88 with K07

Combination pumps A10VO + A10VO

By using combination pumps, it is possible to have independent circuits without the need for splitter gearboxes.
When ordering combination pumps the type designations for the 1st and the 2nd pump must be joined by a "**+**".
Order example:
A10VO100DFR1/31R-VSC12K04+
A10VO45DFR/31R-VSC12N00
If no further pumps are to be mounted at the factory, the simple type designation is sufficient.
A tandem pump, with two pumps of equal size, is permissible without additional supports, assuming that the dynamic mass acceleration does not exceed max. 10 g (= 98.1 m/s^2).
For combination pumps consisting of more than two pumps, a calculation of the mounting flange regarding the permissible mass torque is required (please contact us).

Through drives are plugged with a **non-pressure-resistant** cover. Therefore, single pumps must be equipped with a pressure-resistant cover before commissioning. Through drives can also be ordered with a pressure-resistant cover, please specify in plain text.

Notice
Through drives with installed hub are supplied with a spacer.
The spacer must be removed before installation of the 2nd pump and before commissioning. Refer to the operating instructions 92701-01-B for information

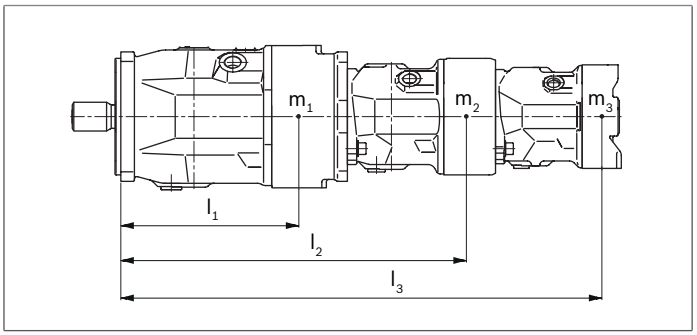

m_1, m_2, m_3	Weight of pump	[kg (lbs)]
l_1, l_2, l_3	Distance from center of gravity	[mm (inch)]
$T_m = (m_1 \times l_1 + m_2 \times l_2 + m_3 \times l_3) \times \frac{1}{102\ (12)}$		[Nm (lb-ft)]

Calculation for multiple pumps		
l_1	=	Front pump distance from center of gravity (values from "Permissible moments of inertia" table)
l_2	=	Dimension "A1" from through drive drawings (page 50 to 52) + l_1 of the 2nd pump
l_3	=	Dimension "A1" from through drive drawings (page 50 to 52) of the 1st pump + "A1" of the 2nd pump + l_1 of the 3rd Pump

Permissible moments of inertia

Size			**18**	**28**	**45**	**71**	**88**	**100**
Static	T_m	Nm	500	880	1370	2160	2160	3000
		lb-ft	369	649	1010	1593	1593	2213
Dynamic at 10 g (98.1 m/s^2)	T_m	Nm	50	88	137	216	216	300
		lb-ft	37	65	101	159	159	221
Weight **without** through drive N00	m	kg	12.9	18	23.5	35.2	35.2	49.5
		lbs	28	40	52	78	78	109
Weight **with** through drive K..	m	kg	13.8	19.3	25.1	38	38	55.4
		lbs	30	43	55	84	84	122
Distance, center of gravity **without** through drive N00	l_1	mm	92	100	113	127	127	161
		inch	3.62	3.94	4.45	5.00	5.00	6.34
Distance, center of gravity **with** through drive K..	l_1	mm	98	107	120	137	137	178
		inch	3.86	4.21	4.72	5.39	5.39	7.01

Connector for solenoids

DEUTSCH DT04-2P
Molded, 2-pin, without bidirectional suppressor diode
P The type of protection with the correctly mounted mating connector is:
- ▶ IP67 (DIN/EN 60529) and
- ▶ IP69K (DIN 40050-9)

▼ **Switching symbol**

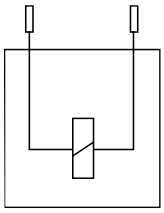

▼ **Mating connector DEUTSCH DT06-2S-EP04**

Consisting of	DT designation
1 housing	DT06-2S-EP04
1 wedge	W2S
2 sockets	0462-201-16141

The mating connector is not included in the scope of delivery.
This can be supplied by Bosch Rexroth on request (material number R902601804).

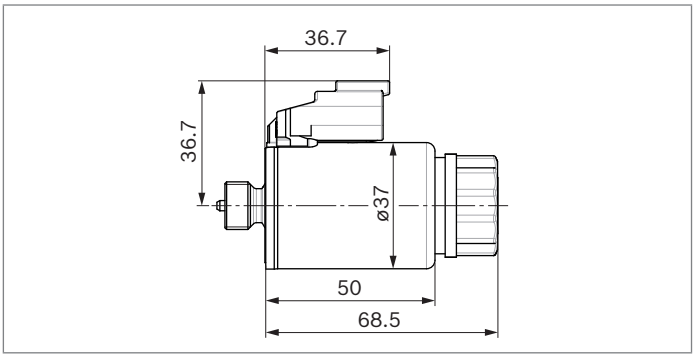

Notice
- ▶ If necessary, you can change the position of the connector by turning the solenoid body.
- ▶ See the operating instructions 92701-01-B for the procedure.
- ▶ Only the dead weight (<1 N (0.22 lbf)) of the connection cable with a length of 150 mm (5.91 inch) may act on the plug-in connection and the solenoid coil with coil nut.
  Other forces and vibrations are not permissible.
  This can be realized e.g. by suspension of the cable at the same vibration system.

Swivel angle sensor

Description

The swivel angle sensor PAL is used for contactless detection of the swivel angle of axial piston units using a Hall effect-based sensor IC. The measured position is converted into electric signals by the redundant swivel angle sensor.
Technical data and safety instructions for the sensor are provided in the relevant data sheet 95161.

Features

- High temperature stability of the output signal
- Shock and vibration resistance
- Integrated electronic fault detection
- CE conformity

▼ **Output characteristic at pin 4, code H**
Swivel angle sensor counter-clockwise installation with view of the shaft; control valve top

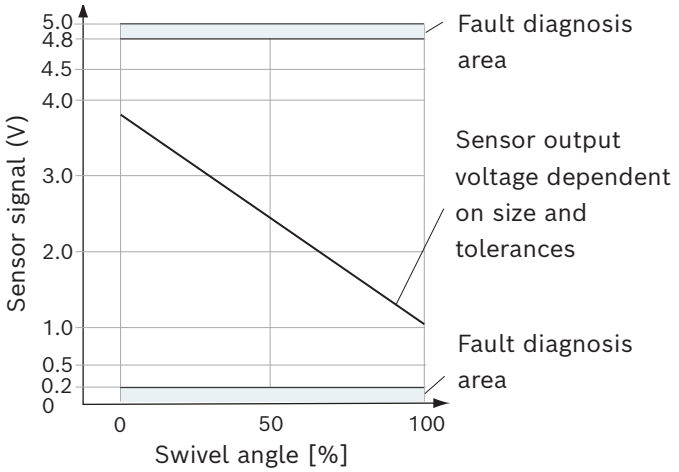

Pin assignment

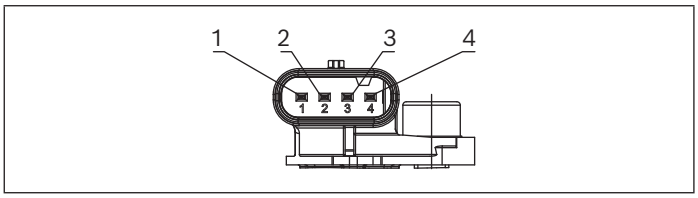

▼ **Pin assignment analog ratiometric/PWM** (order code H)
PAL 2 313A357 CM/10F
(for further information, see data sheet 95161)

Pin	Connection	
1	Sensor signal 2	PWM (active-high; 5 ... 95% on time)
2	Supply voltage	U_{supply}
3	Weight	GND
4	Sensor signal 1	Analog ratiometric (10 ... 90% U_{supply})

▼ **Permissible PAL variants**

Output signal	Type	Code
Analog ratiometric/PWM	PAL 2 313A357 CM/10F	H
SENT/SENT	PAL 2 313A357 SM/10F	P

Characteristic	
Supply voltage U_{supply}	5 VDC
Maximum supply voltage range U_{supply}	4.5 ... 5.5 VDC
Overvoltage range for 48 h	28 VDC
Overvoltage range for 60 sec (τ_{amb} < 35 °C (95 °F))	37 VDC
Current consumption (I_{DD})	20 to 27 mA
Load resistance	See data sheet 95161
Reverse polarity protection (48h/60sec)	-14 VDC/-18 VDC
Operating temperature	–40 °C (–40 °F) to +125 °C (257 °F)
Type of protection ISO 20653 (with plugged mating connector and cable)	IPx9k, IP6kx, IPX6, and IPX7

Notice

- Information on environmental and EMC conditions on request.
- Painting the sensor with electrostatic charge is not permitted (danger: ESD damage)

▼ **Pin assignment SENT/SENT** (order code P)
PAL 2 313A357 SM/10F
(for further information, see data sheet 95161)

Pin	Connection	
1	Sensor signal 2	SENT format H.1 (two 12-bit fast channels)
2	Supply voltage	U_{supply}
3	Weight	GND
4	Sensor signal 1	SENT format H.4 (12 bit fast channel and single secure)

Mating connector

The mating connector is not included in the scope of delivery and can be ordered on request from Bosch Rexroth with the material number R917012863.
For additional mating connector variants (for other cable diameters, among others), see data sheet 95161.

Installation instructions

General

The axial piston unit must be filled with hydraulic fluid and air bleed during commissioning and operation. This must also be observed during longer standstills, as the axial piston unit can empty itself via the hydraulic lines.
Particularly with the "drive shaft up/down" installation position, filling and air bleeding must be carried out completely as there is e.g. a danger of dry running.
The leakage in the housing area must be directed to the reservoir via the highest available drain port (**L**, $\mathbf{L_1}$).
For combination pumps, the leakage must be drained off at each single pump.
If a shared drain line is used for several units, make sure that the respective case pressure in each unit is not exceeded. The shared drain line must be dimensioned to ensure that the maximum permissible case pressure of all connected units is not exceeded in any operating condition, particularly at cold start. If this is not possible, separate drain lines must be laid.
To prevent the transmission of structure-borne noise, use elastic elements to decouple all connecting lines from all vibration-capable components (e.g. reservoir, frame parts).
Under all operating conditions, the suction lines and the drain lines must flow into the reservoir below the minimum fluid level. The permissible suction height h_S results from the total pressure loss, but must not be higher than $h_{S\ max}$ = 800 mm (31.5 inch). The minimum suction pressure at port **S** of 0.8 bar (12 psi) absolute must not be fallen below during operation and cold start.
When designing the reservoir, ensure that there is adequate distance between the suction line and the drain line. We recommend using a baffle (baffle plate) between suction line and drain line. A baffle improves the air separation ability as it gives the hydraulic fluid more time for desorption. Apart from that, this prevents the heated return flow from being drawn directly back into the suction line. The suction port must be supplied with air-free, calmed and cooled hydraulic fluid.

Notice
In certain installation positions, an influence on the adjustment or control can be expected. Gravity, dead weight and case pressure can cause minor characteristic shifts and changes in actuating time.

Installation position

See the following examples **1** to **12**.
Further installation positions are available upon request.
Recommended installation position: **1** and **3**

Key	
F	Filling / Air bleeding
S	Suction port
L; $\mathbf{L_1}$	Drain port
SB	Baffle (baffle plate)
$h_{t\ min}$	Minimum required immersion depth (200 mm (7.87 inch))
h_{min}	Minimum required distance to reservoir bottom (100 mm (3.94 inch))
$h_{ES\ min}$	Minimum height required to prevent axial piston unit from draining (25 mm (0.98 inch))
$h_{S\ max}$	Maximum permissible suction height (800 mm (31.5 inch))

Notice
Port **F** is part of the external piping and must be provided on the customer side to simplify the filling and air bleeding.

Below-reservoir installation (standard)

Below-reservoir installation means that the axial piston unit is installed outside of the reservoir below the minimum fluid level.

▼ **Installation position 1**

Air bleed	Filling
F	L (F)

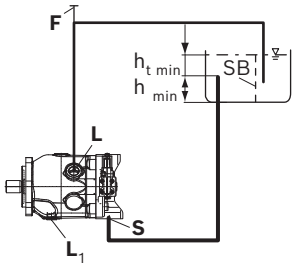

▼ **Installation position 2[1])**

Air bleed	Filling
F	L_1 (F)

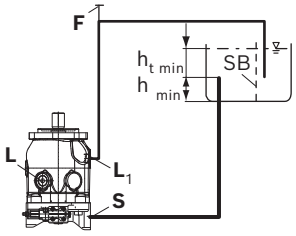

▼ **Installation position 3**

Air bleed	Filling
F	L_1 (F)

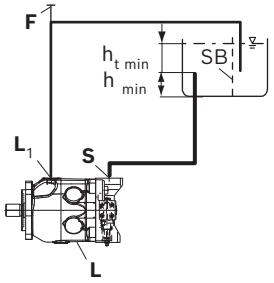

▼ **Installation position 4[1])**

Air bleed	Filling
F	L (F)

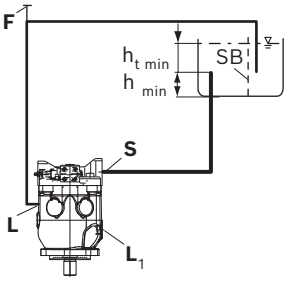

For key, see page 57.

1) Because complete air bleeding and filling are not possible in this position, the pump should be air bled and filled in a horizontal position before installation.

Above-reservoir installation

Above-reservoir installation means that the axial piston unit is installed above the minimum fluid level of the reservoir. To prevent the axial piston unit from draining, a height difference $h_{ES\ min}$ of at least 25 mm (0.98 inch) is required in position 6. Observe the maximum permissible suction height $h_{S\ max}$ = 800 mm (31.5 inch).
A check valve in the drain line is only permissible in individual cases. Consult us for approval.

▼ **Installation position 5**

Air bleed	Filling
F	L (F)

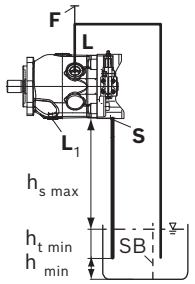

▼ **Installation position 6[1])**

Air bleed	Filling
F	L_1 (F)

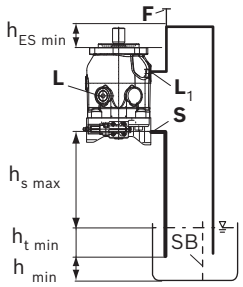

▼ **Installation position 7**

Air bleed	Filling
F	L_1 (F)

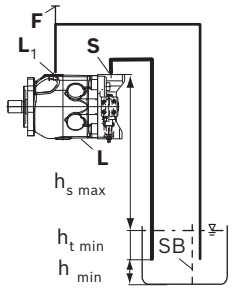

▼ **Installation position 8**

Air bleed	Filling
F	L_1 (F)

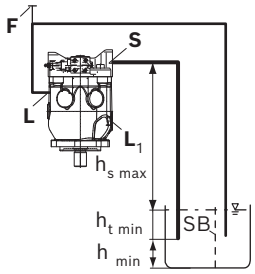

For key, see page 57.

1) Because complete air bleeding and filling are not possible in this position, the pump should be air bled and filled in a horizontal position before installation.

Inside-reservoir installation

Inside-reservoir installation is when the axial piston unit is installed in the reservoir below the minimum fluid level. The axial piston unit is completely below the hydraulic fluid. If the minimum fluid level is equal to or below the upper edge of the pump, see chapter "Above-reservoir installation".
Axial piston units with electrical components (e.g. electric control, sensors) may not be installed in a reservoir below the fluid level.

Notice

- Our advice is to fit a suction pipe to the suction port **S** and to fit a pipe to case drain port **L** or **L_1**. In this case, the other drain port must be plugged. The housing of the axial piston unit is to be filled via **L** or **L_1** (see installation position 9 to 12) before the pipework is fitted and the reservoir is filled with hydraulic fluid.

▼ **Installation position 9**

Air bleed	Filling
L (F)	L (F)

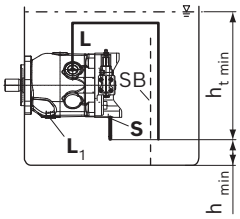

▼ **Installation position 10[1])**

Air bleed	Filling
L_1 (F)	L_1 (F)

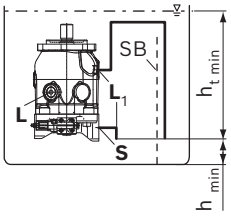

▼ **Installation position 11**

Air bleed	Filling
L_1 (F)	L_1 (F)

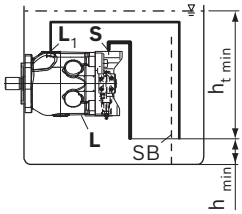

▼ **Installation position 12[1])**

Air bleed	Filling
L (F)	L (F)

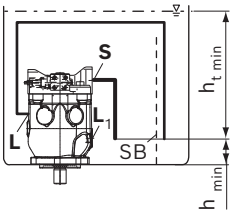

1) Because complete air bleeding and filling are not possible in this position, the pump should be air bled and filled in a horizontal position before installation.

Project planning notes

- The axial piston variable pump A10VO is intended to be used in an open circuit.
- The project planning, installation and commissioning of the axial piston unit requires the involvement of skilled personnel.
- Before using the axial piston unit, please read the corresponding operating instructions completely and thoroughly. If necessary, this can be requested from Bosch Rexroth.
- Before finalizing your design, please request a binding installation drawing.
- The specified data and information contained herein must be observed.
- Depending on the operating conditions of the axial piston unit (working pressure, fluid temperature), the characteristic curve may shift.
- The characteristic curve may also shift due to the dither frequency or control electronics.
- Preservation: Our axial piston units are supplied as standard with preservation protection for a maximum of 12 months. If longer preservation protection is required (maximum 24 months), please specify this in plain text when placing your order. The preservation periods apply under optimal storage conditions, details of which can be found in the data sheet 90312 or the operating instructions.
- Not all configuration variants of the product are approved for use in safety functions according to ISO 13849. Please consult the proper contact at Bosch Rexroth if you require reliability parameters (e.g. $MTTF_d$) for functional safety.
- Depending on the type of control used, electromagnetic effects can be produced when using solenoids. Applying a direct voltage signal (DC) to solenoids does not create electromagnetic interference (EMI) nor is the solenoid affected by EMI. Electromagnetic interference (EMI) potential exists when operating and controlling a solenoid with a modulated direct voltage signal (e.g. PWM signal). Appropriate testing and measures should be taken by the machine manufacturer to ensure other components or operators (e.g. with pacemaker) are not affected by this potential.
- The pressure control (hydraulic or electronic) is not an adequate safeguard against pressure overload. Therefore, a pressure relief valve must be added to the hydraulic system. In this connection, observe the technical limits of the pressure relief valve.
- Please note that a hydraulic system is an oscillating system. This can lead, for example, to the stimulation the natural frequency within the hydraulic system during operation at constant rotational speed over a long period of time. The excitation frequency of the pump is 9 times the rotational speed frequency. This can be prevented, for example, with suitably designed hydraulic lines.
- Please note the information regarding the tightening torques of connection threads and other screw connections in the operating instructions.
- The ports and fastening threads are designed for the p_{max} permissible pressures of the respective ports, see the connection tables. The machine or system manufacturer must ensure that the connecting elements and lines correspond to the specified application conditions (pressure, flow, hydraulic fluid, temperature) with the necessary safety factors.
- The service ports and function ports are only intended to accommodate hydraulic lines.

Safety instructions

- During and shortly after operation, there is a risk of getting burnt on the axial piston unit and especially on the solenoids. Take the appropriate safety measures (e.g. by wearing protective clothing).
- Moving parts in control equipment (e.g. valve spools) can, under certain circumstances, get stuck in position as a result of contamination (e.g. contaminated hydraulic fluid, abrasion, or residual dirt from components). As a result, the hydraulic fluid flow and the build-up of torque in the axial piston unit can no longer respond correctly to the operator's specifications. Even the use of various filter elements (external or internal flow filtration) will not rule out a fault but merely reduce the risk.
  The machine/system manufacturer must test whether remedial measures are needed on the machine for the application concerned in order to bring the driven consumer into a safe position (e.g., safe stop) and ensure any measures are properly implemented.

Bosch Rexroth AG
An den Kelterwiesen 14
72160 Horb a.N.
Germany
Phone +49 7451 92-0
sales.mobile.horb@boschrexroth.de
www.boschrexroth.com

Bosch Rexroth Corporation
8 Southchase Court
Fountain Inn, SC 29644-9018
USA
Phone (864) 967-2777
Fax (864) 967-8900
www.boschrexroth-us.com

Bosch Rexroth Corporation
2315 City Line Road
Bethlehem, PA 18017-2131,
USA
Phone (610) 694-8300
Fax (610) 694-8467
www.boschrexroth-us.com

© Bosch Rexroth AG 1983. All rights reserved, also regarding any disposal, exploitation, reproduction, editing, distribution, as well as in the event of applications for industrial property rights. The data specified within only serve to describe the product. As our products are constantly being further developed, no statements concerning a certain condition or suitability for a certain application can be derived from our information. The information given does not release the user from the obligation of own judgment and verification. It must be remembered that our products are subject to a natural process of wear and aging.