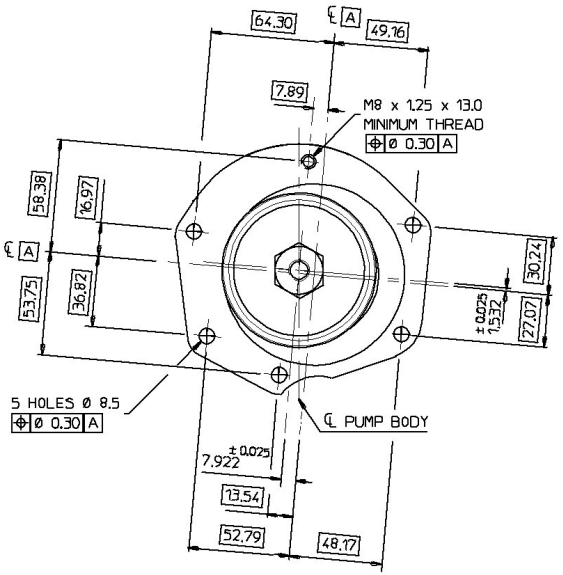

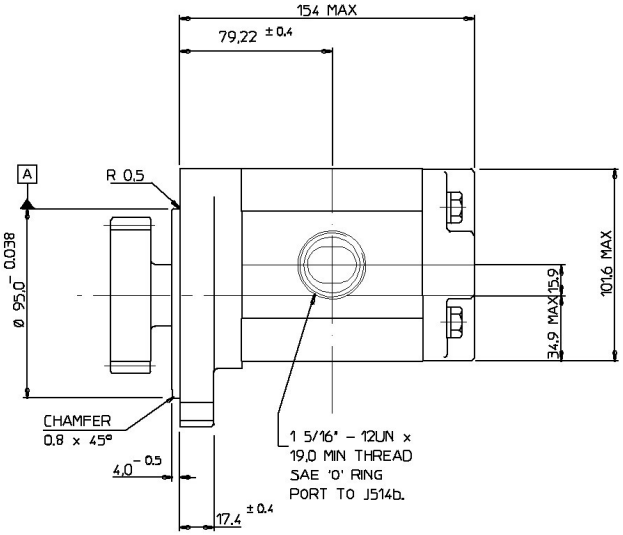

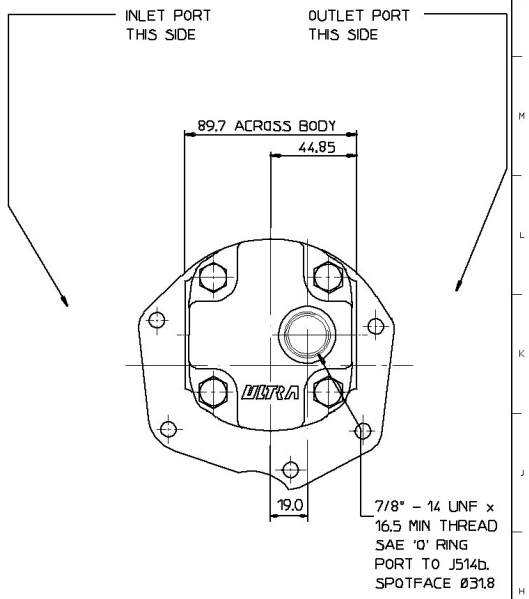

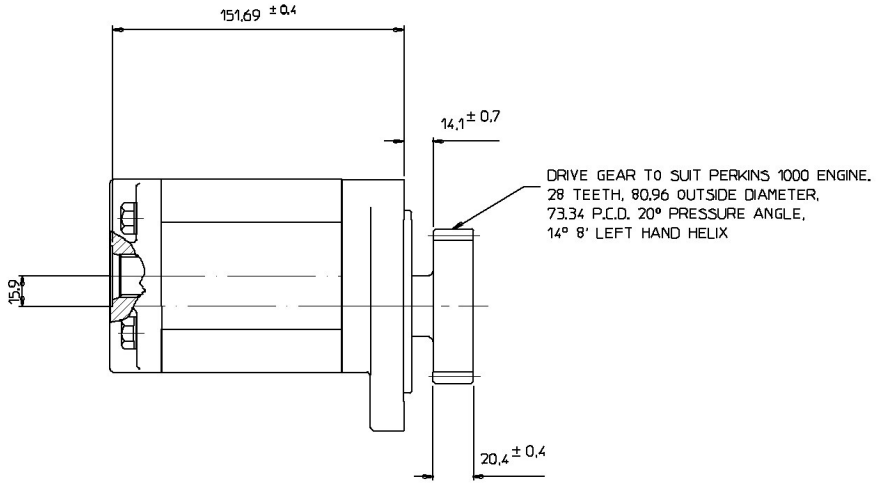

PUMP DATA	
PUMP TYPE	1PX270
THEORETICAL DISPLACEMENT	27.0 cc/rev (1.65 cu in/rev)
MAXIMUM CONTINUOUS PRESSURE P1	145 bar (2103 psi)
MAXIMUM SPEED AT PRESSURE P1	2350 rev/min
MINIMUM SPEED AT PRESSURE P1	500 rev/min
ROTATION WHEN VIEWED ON END OF DRIVESHAFT	CLOCKWISE
APPROX WEIGHT	kg (lb)
OPERATING TEMPERATURE RANGE	CONTINUOUS 0°C TO 80°C COLD START −20°C MAX INTERMITTENT 100°C
SHAFT SEAL TYPE	DOUBLE NITRILE

FOR OPERATING CONDITIONS OUTSIDE THOSE STATED PLEASE CONSULT ULTRA HYDRAULICS LIMITED TECHNICAL SALES DEPARTMENT.

ISSUE No.	1
ISSUED ON	5/8/91
DRAWN	AM
DATE	31-Oct-00
CHECKED	AM
ENG APP.	AM
PROD APP.	——

USED ON | PRODUC
UNIT No.
ASSY. No.

Part No. 9 6 5 2 U

THIRD ANGLE PROJECTION

TITLE
1PX270J7B1B1J2-145-LA-CT1P1E

UNLESS OTHERWISE STATED
ALL DIMENSIONS IN MILLIMETRES / INCHES.
GENERAL MANUFACTURING STANDARDS TO HDS 200
GEOMETRIC TOLERANCES and SYMBOLS TO BS 308.

© ULTRA HYDRAULICS LTD 1999 THIS DRAWING IS THE PROPERTY OF ULTRA HYDRAULICS LIMITED AND IS CONFIDENTIAL. IT IS ISSUED SUBJECT TO THE CONDITIONS THAT :-
(1) INFORMATION OR ANY PART CONTAINED IN IT SHALL NOT BE DISCLOSED IN ANY FORM TO A THIRD PARTY.
(2) IT OR ANY PART OF IT SHALL NOT BE REPRODUCED IN ANY FORM.

ULTRA HYDRAULICS LTD. CHELTENHAM

SIZE A0