Solenoid Valves

Screw-in Cartridge Valves

Maximum Pressure 210 bar (3000 psi) – Maximum Flow 227 l/min (60 USgpm)

Introduction

For over seventy years, Vickers has provided its customers with quality products and innovative solutions for all their power and motion control needs.

We are committed to maintaining this position by offering the most comprehensive range of cartridge valves for industrial and mobile equipment.

The products featured in this catalog represent the very best in screw-in cartridge solenoid valve technology.

> *Products in this catalog have been fatigue tested for one million cycles at 132% or 10 million cycles at 115% of rated pressure.*

Two pressure ratings are shown for all products featured in this catalog – typical application pressure and fatigue pressure. The typical application pressure rating is the maximum recommended operating pressure for the valve in a given system. The fatigue pressure rating is the pressure for the valve to be free for infinite life from metal fatigue.

This catalog gives basic specifications for many of Vickers screw-in cartridge solenoid valves. Its purpose is to provide a quick, convenient reference tool when choosing Vickers cartridge valves or designing a system using these components.

Vickers solenoid valves are offered with the widest choice of flow paths and position options to satisfy most requirements. These options include:

- 2-way. 2-position, normally open and normally closed spool and poppet valves
- 3-way, 2-position spool valves
- 4-way, 2-position spool valves
- 4-way, 3-position spool valves

Valve Features and Benefits

- Rated flows up to 227 l/min (60 USgpm)
- Poppet and spool designs
- Cartridge industry recognized cavities
- One piece, fully molded coils
- All operating parts are hardened steel, ground and honed for long life and low leakage
- Cartridge design for maximum flexibility and minimal manifold space requirements
- Optional low-cost manual override is available on selected models
- All exposed surfaces are zinc dichromate plated to resist corrosion
- All aluminum manifolds are gold anodized to resist corrosion
- Reliable, economical and compact

Coil Features and Benefits

The solenoid operated directional valves in this catalog are offered with a choice of standard voltages and several types of electrical connections. For other coil ratings and connections, consult your Vickers representative.

Standard AC coils are internally rectified to supply them with DC current, therefore they have no “inrush” current value.

- Coils are rated for continuous duty
- Coils are interchangeable for serviceability
- Variety of voltages and terminations
- Coils offer a one-piece weather-proof encapsulated design, eliminating the need for extra seals.
- AC voltage coils are internally full-wave rectified for 50 or 60 cycle (Hz) applications.

An arc suppression diode molded into the coil is available as a standard option on DC coils. Also available, but not shown in this catalog are explosion-proof coils and cartridges that are CSA approved and recognized by the US Underwriters Laboratories. For information and availability, contact your Vickers representative.

Protection of Internally Rectified Coils

The rectifiers used in these coils may require protection from high voltage surges in some electrical circuits containing highly inductive or capacitive components. These include certain types of motors, solenoids, relays, and transformers.

Protection is simple and inexpensive. It consists of installing a commercially available voltage surge suppressor like the General Electric MOV verister V130LA20A for 115 volts AC or the V250LA20A for 230 volts AC, across the AC line supplying the rectified components. A single suppressor will normally protect all of the rectified components in the circuit, as shown in the surge suppressor circuit diagram below.

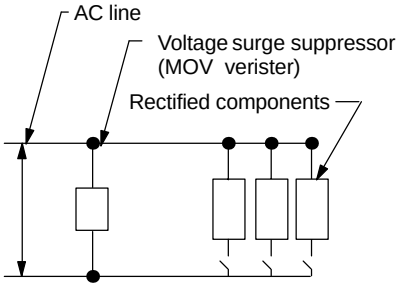

All voltage surge producing components must be installed on this side of suppressor

Switches or relay contacts only. Relay coils must be connected on the line side of the surge suppressor.

No inductive or capacitive loads can be installed between the surge suppressor and rectified valves

WARNING: Application of these products beyond published performance specifications may cause valve malfunction which may result in personal injury and/or damage to the machine.

Maintain 5-8 Nm (4-6 lbf ft) maximum torque on valve tube nut.
Overtightening may cause valve failure.

©Vickers, Incorporated 1999
All Rights Reserved

Contents

MODEL	DESCRIPTION	TYPICAL APPLICATION PRESSURE bar (psi)	RATED FLOW l/min (USgpm)	PAGE
Introduction				2
SV5–8–C/CM poppet type	2-way, 2-position, Normally Closed	210 (3000)	23 (6)	4
SV1–10–C/CM/CR poppet type		210 (3000)	45 (12)	6
SV2–10–C/CM/CR poppet type		210 (3000)	23 (6)	8
SV3–10–C/CM/CR poppet type		210 (3000)	45 (12)	10
SV3–12–C/CM/CR poppet type		210 (3000)	114 (30)	12
SV1–16–C/CM/CR poppet type		210 (3000)	132 (35)	14
SV2–20–C/CM/CR poppet type		210 (3000)	227 (60)	16
SV4–8–C/CM spool type		210 (3000)	11 (3)	18
SV4–10–C/CM/CR spool type		210 (3000)	23 (6)	20
SV5–8–O/OP/OS poppet type	2-way, 2-position, Normally Open	210 (3000)	23 (6)	22
SV3–10–O/OP/OS poppet type		210 (3000)	45 (12)	24
SV5–10–O/OP/OS poppet type		310 (3000)	45 (12)	26
SV3–12–O/OP/OS poppet type		210 (3000)	114 (30)	28
SV3–16–O/OP/OS poppet type		210 (3000)	132 (35)	30
SV3–20–O/OP/OS poppet type		210 (3000)	227 (60)	32
SV4–8–O/OM spool type		210 (3000)	13 (4)	34
SV4–10–O/OM/OR spool type		210 (3000)	23 (6)	36
SV1–8–3/3M spool type	3-way, 2-position	210 (3000)	11 (3)	38
SV4–8–3/3M spool type		210 (3000)	13 (4)	40
SV1–10–3/3M/3R spool type		210 (3000)	23 (6)	42
SV4–10–3/3P/3S spool type		210 (3000)	23 (6)	44
SV1–8–4/4M	4-way, 2-position	210 (3000)	11 (3)	46
SV2–8–4/4M		210 (3000)	13 (4)	48
SV1–10–4/4M/4R		210 (3000)	23 (6)	50
SV2–10–4/4M/4R		210 (3000)	23 (6)	50
SV3–10–4/4M/4R		210 (3000)	23 (6)	54
SV4–10–4/4M/4R		210 (3000)	23 (6)	56
SV5–10–4/4M/4R		210 (3000)	23 (6)	58
SV7–10–4/4P/4S		210 (3000)	17 (5)	60
SV9–10–A	4-way, 3-position	210 (3000)	11 (3)	62
SV9–10–B		210 (3000)	11 (3)	64
SV9–10–D		210 (3000)	11 (3)	66
SV9–10–E		210 (3000)	11 (3)	68
SV9–10–F		210 (3000)	11 (3)	70
SV9–10–G		210 (3000)	11 (3)	72
C-**-2 (U)	Standard Cavity Dimensions			74
C-**-3/4	Standard Cavity Dimensions			75
C-**-2	Aluminum Light Duty Housings, Part Numbers, Dimensions & Weights			76
C-**-2	Aluminum Fatigue Rated Housings, Part Numbers, Dimensions & Weights			77
C-**-3/4	Aluminum Light Duty Housings, Part Numbers, Dimensions & Weights			78
C-**-3/4	Aluminum Fatigue Rated Housings, Part Numbers, Dimensions & Weights			79
Coils	8-Series			80
Coils	10,12,16,20-Series			81
Manual Override Option	P, S, M and R			83
Form Tools	Roughing & Finishing			84
Application Data	Solenoid Valve Miscellaneous Parts			85
Index				

SV5-8-C/CM
2-way, poppet type, normally closed solenoid valve

Functional symbol

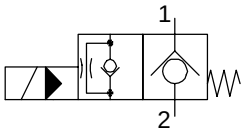

Sectional view

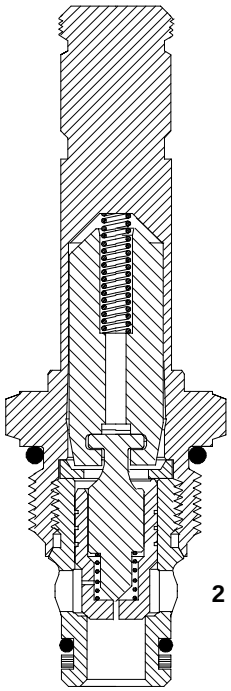

Description

The SV5-8-C is a 2-way, 2-position, poppet type, pilot operated, normally closed, solenoid valve. This valve is used in applications requiring low leakage, such as single acting cylinder applications.

Operation

In the de-energized position, the SV5-8-C blocks flow from port 2 to port 1, and free flow is allowed from port 1 to port 2. In the energized position, flow from port 1 to port 2 is restricted and free flow is allowed from port 2 to port 1.

Ratings and specifications

Performance data is typical with fluid at 21,8 cSt (105 SUS) and 49°C (120°F)

Typical application pressure (all ports) . . . . . 210 bar (3000 psi)

Cartridge fatigue pressure (infinite life) . . . . . 210 bar (3000 psi)

Rated flow . . . . . 23 l/min (6 USgpm)

Internal leakage) . . . . . less than 5 drops / min. max. @ 210 bar (3000 psi)

Coil duty) . . . . . Continuous from 85% to 110% of nominal voltage

Response times (100% rated voltage and flow)) . . . . . Energize: 18 ms
De-energize: 46 ms

Temperature range) . . . . . –40 to 120°C (–40° to 248°F)

Cavity) . . . . . C-8-2 (See page 74)

Fluids) . . . . . All general purpose hydraulic fluids such as:
MIL-H-5606, SAE 10, SAE 20, etc.

Filtration) . . . . . Cleanliness code 18/**16/13**

Standard housing material) . . . . . Aluminum

Weight including coil) . . . . . 0,28 kg (0.62 lbs.)

Seal kit) . . . . . 02-165875 Buna-N, 02-165877 Viton®
Viton is a registered trademark of E.I. DuPont Co.

Pressure Drop Curves
Cartridge only

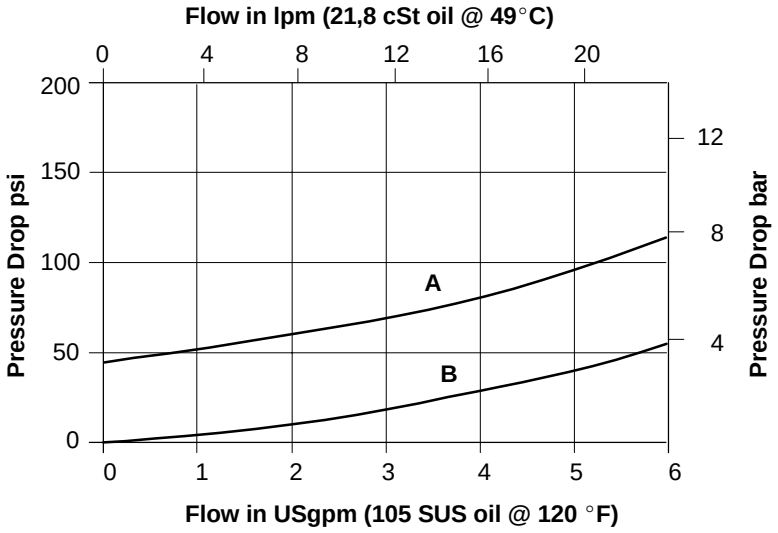

A -Port 1 to port 2 de-energized
B -Port 2 to port 1 energized

Model Code

SV5 - 8 (V) - C (M) - (A) - ** - ** * S**

1 2 3 4 5 6 7 8 9 10

1 Function

SV5 – Solenoid valve

2 Size

8 - 8 size

3 Seals

Blank- Buna-N
V - Viton

4 Style

C - Normally closed

5 Manual override option

Blank - No manual override
M - Knob type

6 Valve housing material

Omit for cartridge only

A - Aluminum

7 Port size

0 - Cartridge only

Code	Port size	Housing number
2G	1/4" BSPP	02-160727
3G	3/8" BSPP	02-160728
4T	SAE 4	02-160730
6T	SAE 6	02-160731
8T	SAE 8	02-160732

See page 77 for housings

8 Voltage rating

00 - No coil
12D - 12VDC
24D - 24VDC
36D - 36VDC
24A - 24VAC
120A- 120VAC
240A- 240VAC
12B - 12VDC/w diode*
24B - 24VDC/w diode*

*optional arc suppression diode

9 Connector types

Blank - No coil

Voltage	**G** - ISO 4400 DIN 43650	**P** - 1/2" NPT conduit port w/ leadwire	**Q** - Spade terminals	**W** - Leadwire	**N** - Deutsch (DC only)	**Y** - Amp JR (DC only)
12D	02-160690	02-160684	02-160681	02-160678	02-160958	02-178001
24D	02-160691	02-160685	02-160682	02-160679	02-160959	02-178002
36D	02-160692	02-160686	02-160683	02-160680	02-160960	02-178003
24A	02-160702	02-160699	02-160696	02-160693	–	–
120A	02-160703	02-160700	–	–		
240A	02-160704	02-160701				
12B	02-178810	–	02-178804	02-178802	02-160953	02-160957
24B	02-178811		02-178805	02-178803	02-178812	02-178815

10 Series Coil

S - 8-series coil, 16 W

Dimensions

mm (inch)

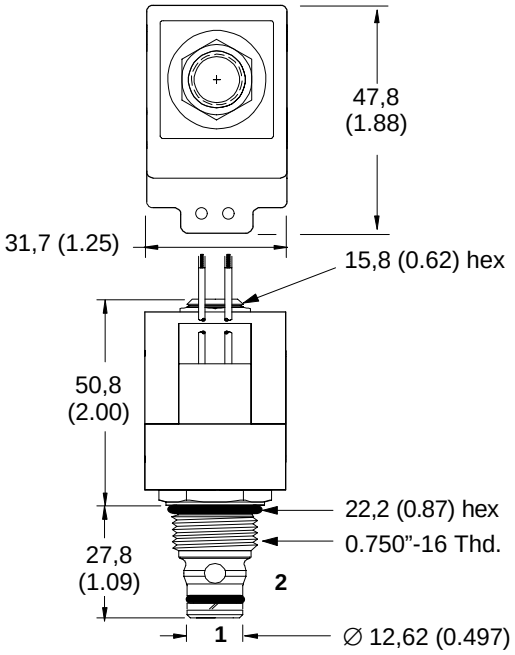

Torque cartridge in housing 34-41 Nm (25-30 lbf ft)

Valve is shown with "W" coil. See other coils on page 80.

Note
When solenoid valve is ordered as cartridge only, nut is included.

For valve dimensions with manual override option installed see page 83

WARNING

Maintain 5-8 Nm (4-6 lbf ft) maximum torque on valve tube nut. Overtightening may cause valve failure.

SV1-10-C/CM/CR

2-way, poppet type, normally closed solenoid valve

Functional symbol

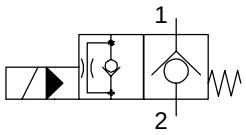

Sectional view

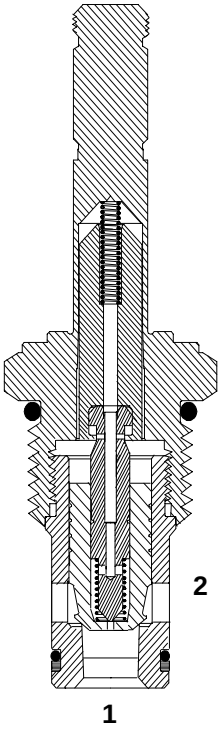

Description

The SV1-10-C is a 2-way, 2-position, pilot operated, poppet type, normally closed, screw-in cartridge solenoid valve.

Operation

In the de-energized position, this valve blocks flow from port 2 to port 1 and free flow is allowed from port 1 to port 2. In the energized position, flow from port 1 to port 2 is restricted while free flow is allowed from port 2 to port 1.

Ratings and specifications

Performance data is typical with fluid at 21,8 cSt (105 SUS) and 49°C (120°F)

Typical application pressure (all ports)	210 bar (3000 psi)
Cartridge fatigue pressure (infinite life)	210 bar (3000 psi)
Rated flow	45 l/min (12 USgpm)
Internal leakage (port 2 to port 1)	5 drops/min. maximum @ 210 bar (3000 psi)
Temperature range	–40 to 120°C (–40° to 248°F)
Coil duty	Continuous from 85% to 110% of nominal voltage
Cavity	C-10-2 (See page 74)
Fluids	All general purpose hydraulic fluids such as: MIL-H-5606, SAE 10, SAE 20, etc.
Filtration	Cleanliness code 18**/16/13**
Standard housing material	Aluminum
Weight including coil	0,4 kg (0.87 lb.)
Seal kit	565803 Buna-N 566086 Viton®

Viton is a registered trademark of E.I. DuPont Co.

Pressure Drop Curves

Cartridge only

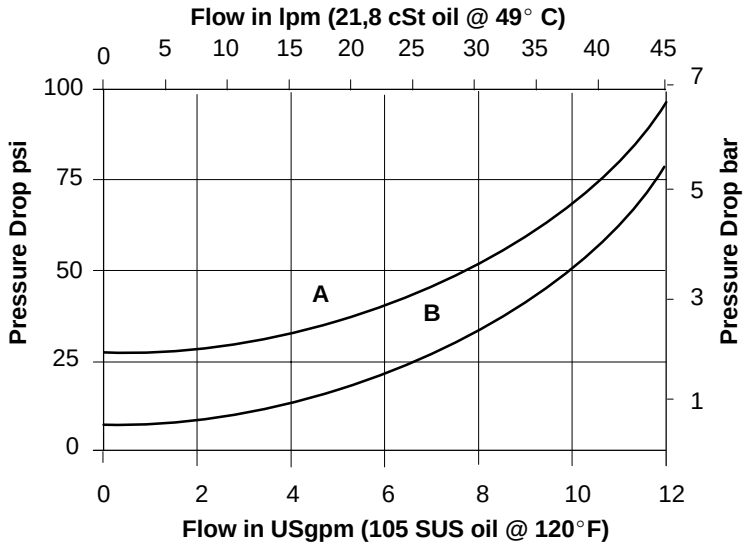

A -Port 1 to port 2 de-energized

B -Port 2 to port 1 energized

SV1 - 10 (V) - C (*) - ** - ** ***

1 2 3 4 5 6 7 8

1 **Function**

SV1 – Solenoid valve

2 **Size**

10 - 10 size

3 **Seals**

Blank- Buna-N
V - Viton

4 **Style**

C - Normally closed

5 **Manual override option**

Blank - No manual override
M - Knob type
R - Cable type

6 **Port size**

0 - Cartridge only

Code	Port size	Housing number
3B	3/8” BSPP	02-175462
6T	SAE 6	566151
2G	1/4 ” BSPP	876702
3G	3/8” BSPP	876703
6H	SAE 6	876700
8H	SAE 8	876701

See pages 76 & 77 for housings

7 **Voltage rating**

00 - No coil
12D - 12VDC
24D - 24VDC
36D - 36VDC
24A - 24VAC
120A- 120VAC
240A- 240VAC
12B - 12VDC/w diode*
24B - 24VDC/w diode*

*optional arc suppression diode

8 **Connector types**

Blank - No coil

Voltage	**G** - ISO 4400 DIN 43650	**P** - 1/2” NPT conduit port w/ leadwire	**Q** - Spade terminals	**W** - Leadwire	**N** - Deutsch (DC only)	**Y** - Amp JR (DC only)
12D	02–178086	02-178078	02-178070	02-178063	02-178093	02-178711
24D	02–178087	02-178079	02-178073	02-178065	02-178094	02-178712
36D	02–178089	02-178080	02-178075	02-178066	02-178095	02-178713
24A	02–178112	02-178104	02-178103	02-178102	–	–
120A	02–178114	02-178106	–	–		
240A	02–178117	02-178109				
12B	02–178840	–	02-178834	02-178832	02-178842	02-178762
24B	02–178841		02-178835	02-178833	02-178843	02-178846

Dimensions

mm (inch)

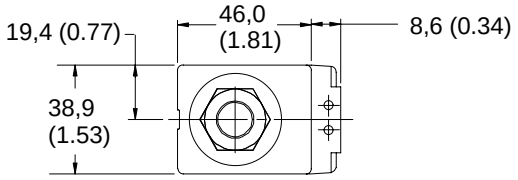

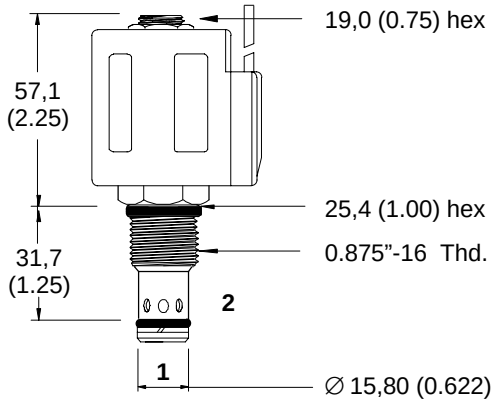

Torque cartridge in housing 47-54 Nm (35-40 lbf ft)

Valve is shown with “W” coil. See other coils on page 81.

Note
When solenoid valve is ordered as cartridge only, nut is included.

For valve dimensions with manual override option installed see page 83

WARNING

Maintain 5-8 Nm (4-6 lbf ft) maximum torque on valve tube nut. Overtightening may cause valve failure.

SV2-10-C/CM/CR

2-way, poppet type, normally closed solenoid valve

Functional symbol

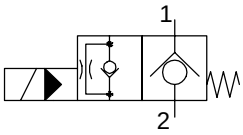

Sectional view

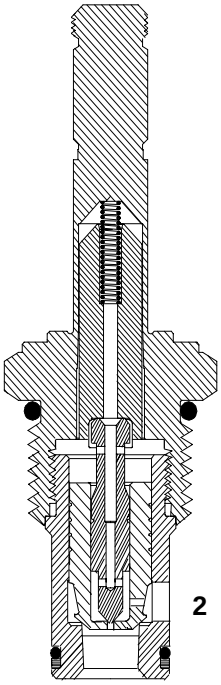

Description

The SV2-10-C is a 2-way, 2-position, pilot operated, poppet type, normally closed, screw-in cartridge solenoid valve.

Operation

In the de-energized position, this valve blocks flow from port 2 to port 1 and free flow is allowed from port 1 to port 2. In the energized position, flow from port 1 to port 2 is restricted while free flow is allowed from port 2 to port 1.

Ratings and specifications

Performance data is typical with fluid at 21,8 cSt (105 SUS) and 49°C (120°F)

Typical application pressure (all ports)	210 bar (3000 psi)
Cartridge fatigue pressure (infinite life)	210 bar (3000 psi)
Rated flow	23 l/min (6 USgpm)
Internal leakage (port 2 to port 1)	5 drops/min. maximum @ 210 bar (3000 psi)
Temperature range	–40 to 120°C (–40° to 248°F)
Coil duty	Continuous from 85% to 110% of nominal voltage
Cavity	C-10-2 (See page 74)
Fluids	All general purpose hydraulic fluids such as: MIL-H-5606, SAE 10, SAE 20, etc.
Filtration	Cleanliness code 18**/16/13**
Standard housing material	Aluminum
Weight including coil	0,4 kg (0.87 lb.)
Seal kit	565803 Buna-N 566086 Viton®

Viton is a registered trademark of E.I. DuPont Co.

Pressure Drop Curves

Cartridge only

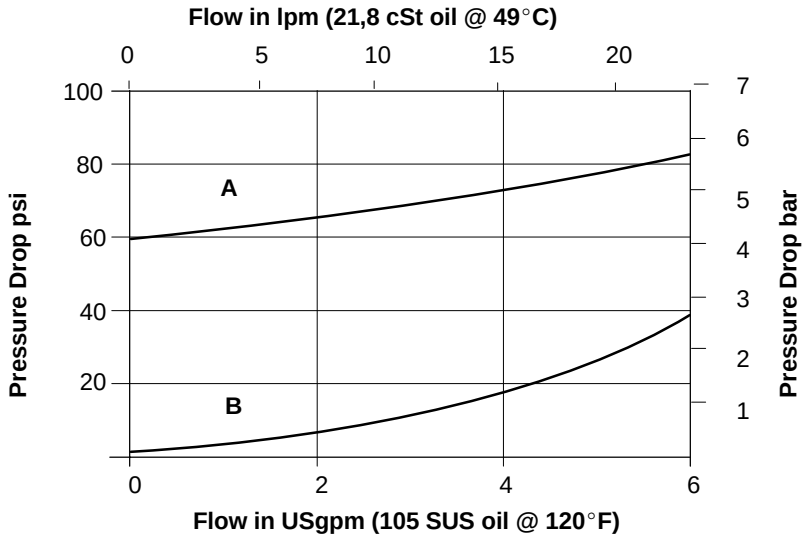

A -Port 1 to port 2 de-energized
B -Port 2 to port 1 energized

SV2 - 10 (V) - C (*) - ** - ** ***

1 2 3 4 5 6 7 8

1 **Function**

SV2 – Solenoid valve

2 **Size**

10 - 10 size

3 **Seals**

Blank- Buna-N
V - Viton

4 **Style**

C - Normally closed

5 **Manual override option**

Blank - No manual override
M - Knob type
R - Cable type

6 **Port size**

0 - Cartridge only

Code	Port size	Housing number
3B	3/8" BSPP	02-175462
6T	SAE 6	566151
2G	1/4 " BSPP	876702
3G	3/8" BSPP	876703
6H	SAE 6	876700
8H	SAE 8	876701

See pages 76 & 77 for housings

7 **Voltage rating**

00 - No coil
12D - 12VDC
24D - 24VDC
36D - 36VDC
24A - 24VAC
120A- 120VAC
240A- 240VAC
12B - 12VDC/w diode*
24B - 24VDC/w diode*

*optional arc suppression diode

8 **Connector types**

Blank - No coil

Voltage	**G** - ISO 4400 DIN 43650	**P** - 1/2" NPT conduit port w/ leadwire	**Q** - Spade terminals	**W** - Leadwire	**N** - Deutsch (DC only)	**Y** - Amp JR (DC only)
12D	02–178086	02-178078	02-178070	02-178063	02-178093	02-178711
24D	02–178087	02-178079	02-178073	02-178065	02-178094	02-178712
36D	02–178089	02-178080	02-178075	02-178066	02-178095	02-178713
24A	02–178112	02-178104	02-178103	02-178102	–	–
120A	02–178114	02-178106	–	–		
240A	02–178117	02-178109				
12B	02–178840	–	02-178834	02-178832	02-178842	02-178762
24B	02–178841		02-178835	02-178833	02-178843	02-178846

Dimensions

mm (inch)

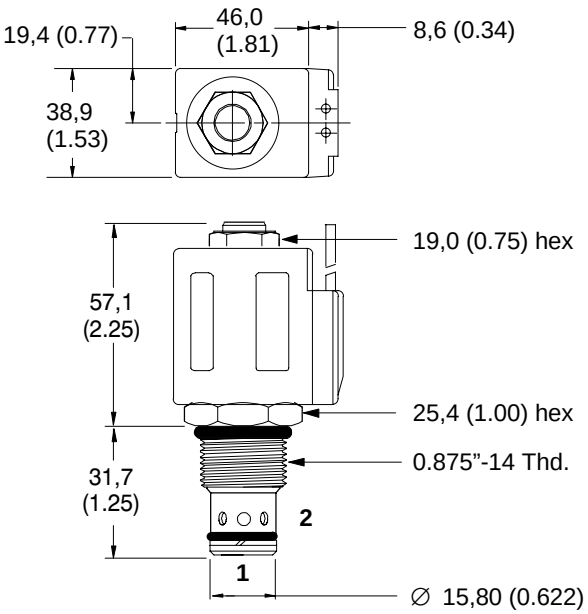

Torque cartridge in housing 47-54 Nm (35-40 lbf ft)

Valve is shown with "W" coil. See other coils on page 81.

Note
When solenoid valve is ordered as cartridge only, nut is included.

For valve dimensions with manual override option installed see page 83

WARNING

Maintain 5-8 Nm (4-6 lbf ft) maximum torque on valve tube nut. Overtightening may cause valve failure.

SV3-10-C/CM/CR

2-way, poppet type, normally closed solenoid valve

Functional symbol

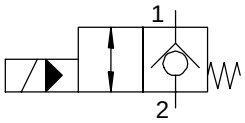

Sectional view

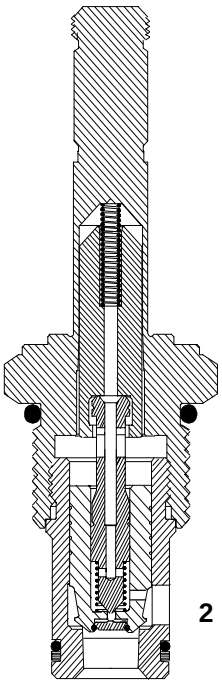

Description

The SV3-10-C is a 2-way, 2-position, poppet-type, normally closed screw-in cartridge solenoid valve.

Operation

In the de-energized position, flow is blocked from port 2 to port 1 and free flow is allowed from port 1 to port 2. In the energized position, the poppet lifts to allow flow in either direction.

Ratings and specifications

Performance data is typical with fluid at 21,8 cSt (105 SUS) and 49°C (120°F)

Typical application pressure port 1 to port 2	210 bar (3000 psi)
Cartridge fatigue pressure (infinite life)	210 bar (3000 psi)
Rated flow	45 l/min (12 USgpm)
Internal leakage (port 2 to 1)	less than 5 drops / min. max. @ 210 bar (3000 psi)
Temperature range	–40 to 120°C (–40° to 248°F)
Coil duty	Continuous from 85% to 110% of nominal voltage
Cavity	C-10-2 (See page 74)
Fluids	All general purpose hydraulic fluids such as: MIL-H-5606, SAE 10, SAE 20, etc.
Filtration	Cleanliness code 18/**16/13**
Standard housing material	Aluminum
Weight including coil	0,4 kg (0.87 lb.)
Seal kit	565803 Buna-N 566086 Viton®

Viton is a registered trademark of E.I. DuPont Co.

Pressure Drop Curves

Cartridge only

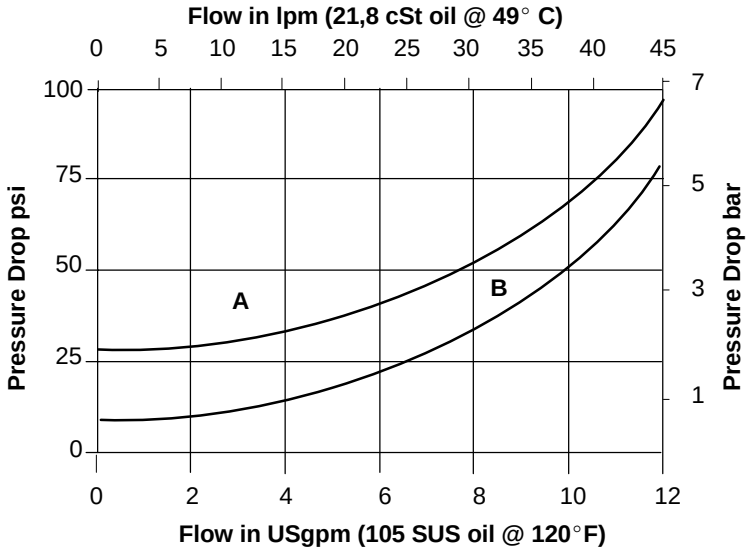

A -Port 1 to port 2 de-energized

B -Port 2 to port 1 energized

SV3 - 10 (V) - C (*) - ** - ** ***

1 2 3 4 5 6 7 8

1 **Function**

SV3 – Solenoid valve

2 **Size**

10 - 10 Size

3 **Seals**

Blank- Buna-N
V - Viton

4 **Style**

C - Normally closed

5 **Manual override option**

Blank - No manual override
M - Knob type
R - Cable type

6 **Port size**

0 - Cartridge only

Code	Port size	Housing number
3B	3/8" BSPP	02-175462
6T	SAE 6	566151
2G	1/4 " BSPP	876702
3G	3/8" BSPP	876703
6H	SAE 6	876700
8H	SAE 8	876701

See pages 76 & 77 for housings

7 **Voltage rating**

00 - No coil
12D - 12VDC
24D - 24VDC
36D - 36VDC
24A - 24VAC
120A- 120VAC
240A- 240VAC
12B - 12VDC/w diode*
24B - 24VDC/w diode*

*optional arc suppression diode

8 **Connector types**

Blank - No coil

Voltage	**G** - ISO 4400 DIN 43650	**P** - 1/2" NPT conduit port w/ leadwire	**Q** - Spade terminals	**W** - Leadwire	**N** - Deutsch (DC only)	**Y** - Amp JR (DC only)
12D	02–178086	02-178078	02-178070	02-178063	02-178093	02-178711
24D	02–178087	02-178079	02-178073	02-178065	02-178094	02-178712
36D	02–178089	02-178080	02-178075	02-178066	02-178095	02-178713
24A	02–178112	02-178104	02-178103	02-178102	–	–
120A	02–178114	02-178106	–	–		
240A	02–178117	02-178109				
12B	02–178840	–	02-178834	02-178832	02-178842	02-178762
24B	02–178841		02-178835	02-178833	02-178843	02-178846

Dimensions

mm (inch)

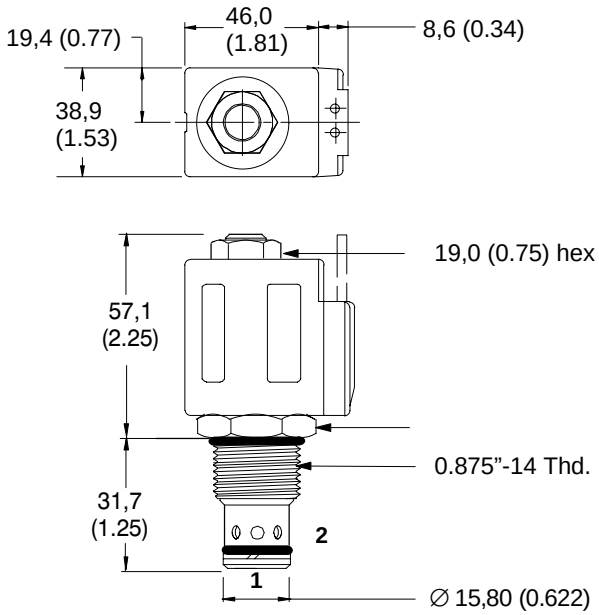

Torque cartridge in housing 47-54 Nm (35-40 lbf ft)

Valve is shown with "W" coil. See other coils on page 81.

Note
When solenoid valve is ordered as cartridge only, nut is included.

For valve dimensions with manual override option installed see page 83

WARNING

Maintain 5-8 Nm (4-6 lbf ft) maximum torque on valve tube nut. Overtightening may cause valve failure.

SV3-12-C/CM/CR

2-way, poppet type, normally closed solenoid valve

Functional symbol

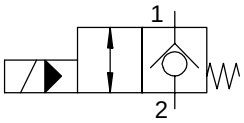

Sectional view

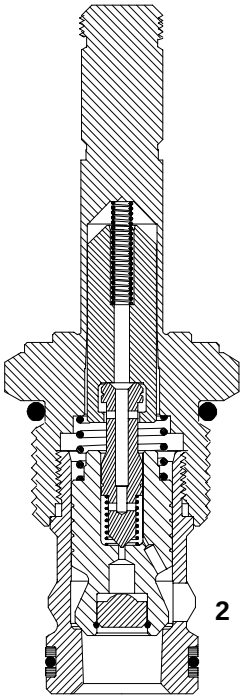

Description

The SV3-12-C is a 2-way, 2-position, poppet-type, pilot-operated, normally closed solenoid cartridge valve.

Operation

In the de-energized position, flow is blocked from port 2 to port 1 and free flow is allowed from port 1 to port 2. In the energized position, the poppet lifts to allow flow in either direction.

Ratings and specifications

Performance data is typical with fluid at 21,8 cSt (105 SUS) and 49°C (120°F)

Typical application pressure (port 1 to 2) . . . . . 210 bar (3000 psi)

Cartridge fatigue pressure (infinite life) . . . . . 210 bar (3000 psi)

Rated flow . . . . . 114 l/min (30 USgpm)

Internal leakage port “2” to port “1” . less than 5 drops / min. max. @ 210 bar (3000 psi)

Temperature range . . . . . –40 to 120°C (–40° to 248°F)

Coil duty . . . . . Continuous fro 85% to 110% nominal voltage

Response time (100% rated flow and voltage) . . . . . Energize: 75 ms
De-energize: 150 ms

Cavity . . . . . C-12-2 or C-12-2U (See page 74)

Fluids . . . . . All general purpose hydraulic fluids such as:
MIL-H-5606, SAE 10, SAE 20, etc.

Filtration . . . . . Cleanliness code 18/**16/13**

Standard housing material . . . . . Aluminum

Weight including coil . . . . . 0,336 kg (0.74 lb.)

Seal kit . . . . . 02-165889 Buna-N
02-165888 Viton®

Viton is a registered trademark of E.I. DuPont Co.

Pressure Drop Curves

Cartridge only

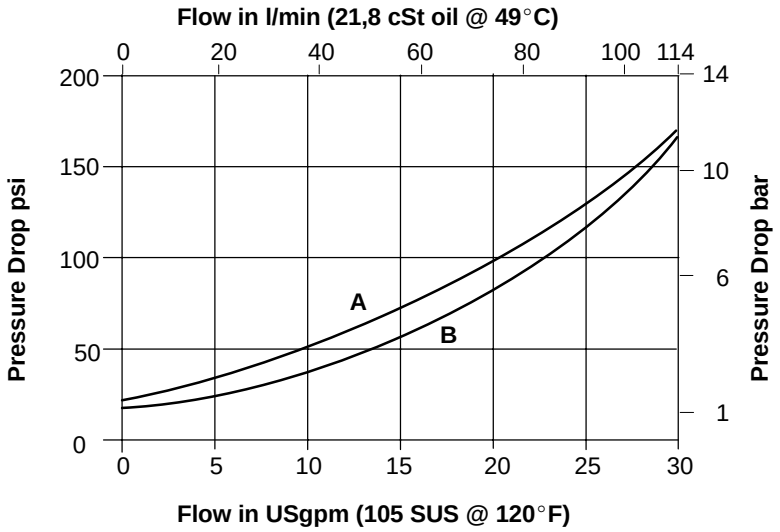

A - Port 1 to port 2 de-energized

B - Port 1 to port 2 energized

SV3 - 12 (V) - C (*) - (A) - * - (U) - **** ***

1 2 3 4 5 6 7 8 9 10

1 **Function**

SV3 – Solenoid valve

2 **Size**

12 - 12 Size

3 **Seals**

Blank- Buna-N
V - Viton

4 **Style**

C - Normally closed

5 **Manual override option**

Blank - No manual override
M - Knob type
R - Cable type

6 **Valve housing material**
Omit for cartridge only

A - Aluminum

7 **Port size**

0 - Cartridge only

Code	Port size	Housing number
4G	1/2" BSPP	02-161118 (C-12-2)
6G	3/4 " BSPP	02-161117 (C-12-2)
10T	SAE 10	02-160640 (C-12-2)
12T	SAE 12	02-160644 (C-12-2)
4G	1/2" BSPP	02-161116(C-12-2U)
6G	3/4 " BSPP	02-161115(C-12-2U)
10T	SAE 10	02-160641(C-12-2U)
12T	SAE 12	02-160645(C-12-2U)

See page 77 for housings

10 **Connector types**

Blank - No coil

Voltage	**G** - ISO 4400 DIN 43650	**P** - 1/2" NPT conduit port w/ leadwire	**Q** - Spade terminals	**W** - Leadwire	**N** - Deutsch (DC only)	**Y** - Amp JR (DC only)
12D	02–178086	02-178078	02-178070	02-178063	02-178093	02-178711
24D	02–178087	02-178079	02-178073	02-178065	02-178094	02-178712
36D	02–178089	02-178080	02-178075	02-178066	02-178095	02-178713
24A	02–178112	02-178104	02-178103	02-178102	–	–
120A	02–178114	02-178106	–	–		
240A	02–178117	02-178109				
12B	02–178840	–	02-178834	02-178832	02-178842	02-178762
24B	02–178841		02-178835	02-178833	02-178843	02-178846

8 **Cavity**

Blank - Cavity w/o undercut
U - Cavity w/undercut

9 **Voltage rating**

00 - No coil
12D - 12VDC
24D - 24VDC
36D - 36VDC
24A - 24VAC
120A- 120VAC
240A- 240VAC
12B - 12VDC/w diode*
24B - 24VDC/w diode*

*optional arc suppression diode

Dimensions

mm (inch)

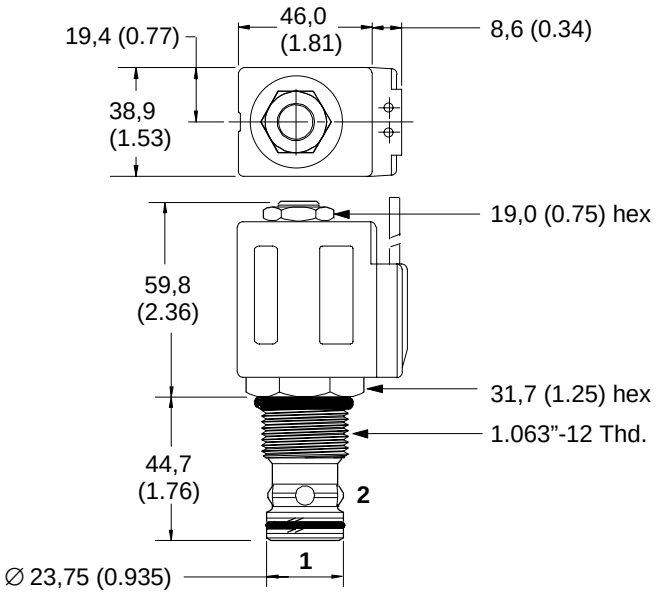

Torque cartridge in housing 81-95 Nm (60-70 lbf ft)

Valve is shown with "W" coil. See other coils on page 81.

Note
When solenoid valve is ordered as cartridge only, nut is included.

For valve dimensions with manual override option installed see page 83

WARNING

Maintain 5-8 Nm (4-6 lbf ft) maximum torque on valve tube nut. Overtightening may cause valve failure.

SV1-16-C/CM/CR

2-way, poppet type, normally closed solenoid valve

Functional symbol

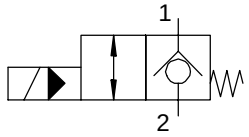

Sectional view

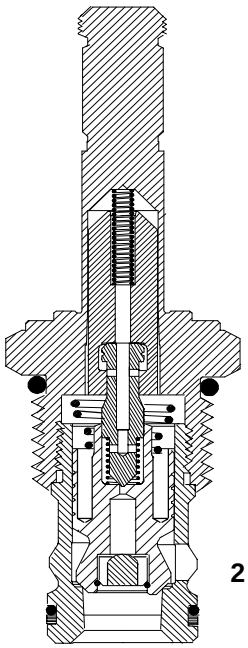

Description

The SV1-16-C is a 2-way, 2-position, poppet type, pilot operated, normally closed screw-in cartridge solenoid valve.

Operation

In the de-energized position, flow is blocked from port 2 to port 1 and free flow is allowed from port 1 to port 2. In the energized position, bi-directional flow is allowed between port 1 and port 2.

Ratings and specifications

Performance data is typical with fluid at 21,8 cSt (105 SUS) and 49°C (120°F)

Typical application pressure (all ports) . . . . . 210 bar (3000 psi)

Cartridge fatigue pressure (infinite life) . . . . . 210 bar (3000 psi)

Rated flow . . . . . 132 l/min (35 USgpm)

Internal leakage port “2” to port “1” . less than 5 drops / min. max. @ 210 bar (3000 psi)

Temperature range . . . . . –40 to 120°C (–40° to 248°F)

Coil duty . . . . . Continuous from 85% to 110% nominal voltage

Cavity . . . . . C-16-2 (See page 74)

Fluids . . . . . All general purpose hydraulic fluids such as: MIL-H-5606, SAE 10, SAE 20, etc.

Filtration . . . . . Cleanliness code 18/**16/13**

Standard housing material . . . . . Aluminum

Weight including coil . . . . . 1,15 kg (2.53 lb.)

Seal kit . . . . . 565810 Buna-N
889609 Viton®

Viton is a registered trademark of E.I. DuPont Co.

Pressure Drop Curves

Cartridge only

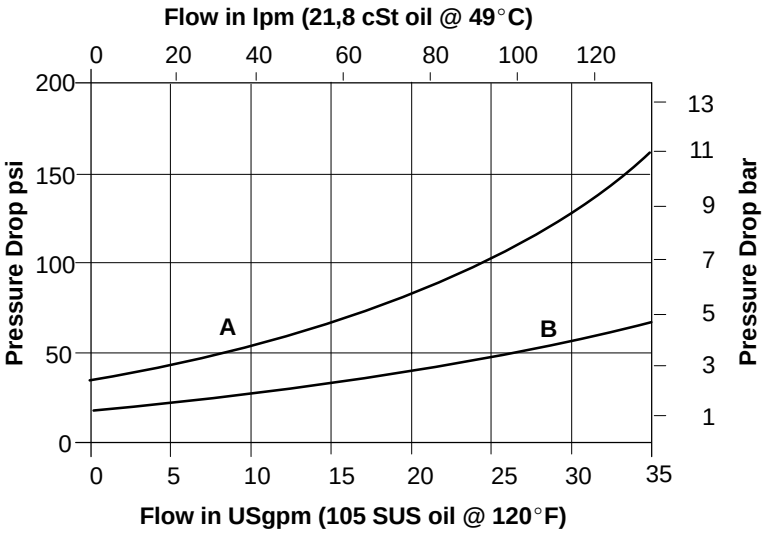

A -Port 2 to port 1 energized
B-Port 1 to port 2 de-energized

S V1 - 16 (V) - C (*) -*-**** ***

1 2 3 4 5 6 7 8

1 Function

SV1 – Solenoid valve

2 Size

16 - 16 Size

3 Seals

Blank- Buna-N
V - Viton

4 Style

C - Normally closed

5 Manual override option

Blank - No manual override
M - Knob type
R - Cable type

6 Port size

0 - Cartridge only

Code	Port size	Housing number
6B	3/4" BSPP	02-175463
12T	SAE 12	566149
6G	3/4 " BSPP	876718
10H	SAE 10	876717
12H	SAE 12	566113

See pages 76 and 77 for housings

7 Voltage rating

00 - No coil
12D - 12VDC
24D - 24VDC
36D - 36VDC
24A - 24VAC
120A- 120VAC
240A- 240VAC
12B - 12VDC/w diode*
24B - 24VDC/w diode*

*optional arc suppression diode

8 Connector types

Blank - No coil

Voltage	**G** - ISO 4400 DIN 43650	**P** - 1/2" NPT conduit port w/ leadwire	**Q** - Spade terminals	**W** - Leadwire	**N** - Deutsch (DC only)	**Y** - Amp JR (DC only)
12D	02–178086	02-178078	02-178070	02-178063	02-178093	02-178711
24D	02–178087	02-178079	02-178073	02-178065	02-178094	02-178712
36D	02–178089	02-178080	02-178075	02-178066	02-178095	02-178713
24A	02–178112	02-178104	02-178103	02-178102	–	–
120A	02–178114	02-178106	–	–		
240A	02–178117	02-178109				
12B	02–178840	–	02-178834	02-178832	02-178842	02-178762
24B	02–178841		02-178835	02-178833	02-178843	02-178846

Dimensions

mm (inch)

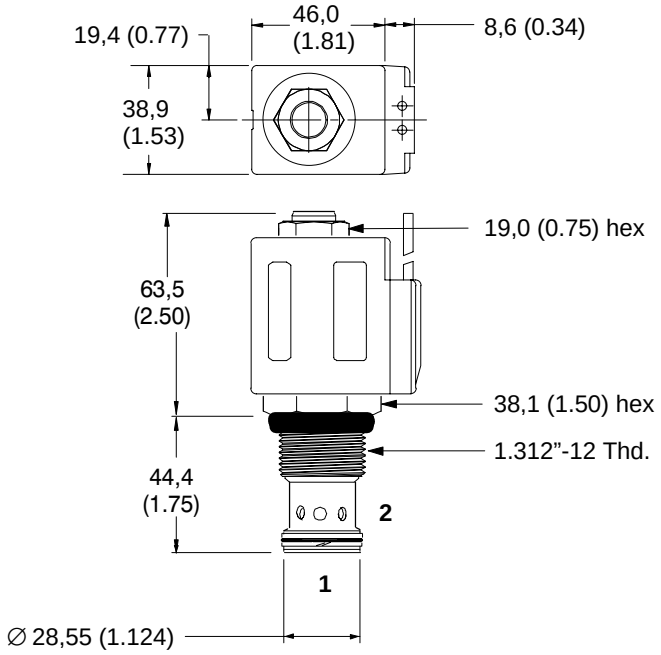

Torque cartridge in housing 108-122 Nm (80-90 lbf ft)

Valve is shown with "W" coil. See other coils on page 81.

Note
When solenoid valve is ordered as cartridge only, nut is included.

For valve dimensions with manual override option installed see page 83

WARNING

Maintain 5-8 Nm (4-6 lbf ft) maximum torque on valve tube nut. Overtightening may cause valve failure.

SV2-20-C/CM/CR

2-way, poppet type, normally closed solenoid valve

Functional symbol

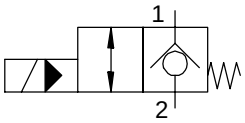

Sectional view

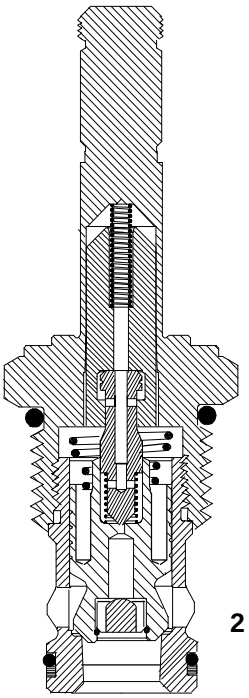

Description

The SV2-20-C is a 2-way, 2-position, poppet type, pilot operated, normally closed screw-in cartridge solenoid valve.

Operation

In the de-energized position, flow is blocked from port 2 to port 1 and free flow is allowed from port 1 to port 2. In the energized position, bi-directional flow is allowed between port 1 and port 2.

Ratings and specifications

Performance data is typical with fluid at 21,8 cSt (105 SUS) and 49°C (120°F)

Typical application pressure (all ports) . . . . . 210 bar (3000 psi)

Cartridge fatigue pressure (infinite life) . . . . . 210 bar (3000 psi)

Rated flow . . . . . 227 l/min (60 USgpm)

Internal leakage port 2 to port 1 . . . less than 5 drops / min. max. @ 210 bar (3000 psi)

Temperature range . . . . . –40 to 120°C (–40° to 248°F)

Coil duty . . . . . Continuous from 85% to 110% nominal voltage

Cavity . . . . . C-20-2 (See page 74)

Fluids . . . . . All general purpose hydraulic fluids such as: MIL-H-5606, SAE 10, SAE 20, etc.

Filtration . . . . . Cleanliness code 18/**16/13**

Standard housing material . . . . . Aluminum

Weight including coil . . . . . 1,2 kg (2.70 lb.)

Seal kit . . . . . 889615 Buna-N
889619 Viton®

Viton is a registered trademark of E.I. DuPont Co.

Pressure Drop Curves

Cartridge only

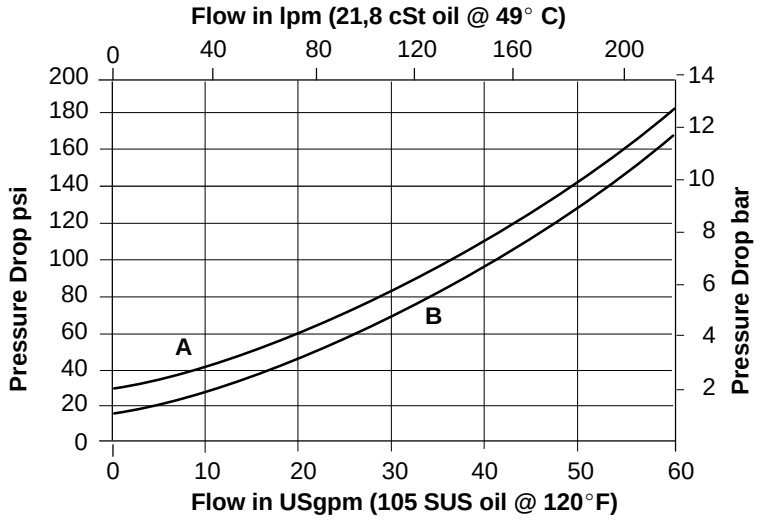

A-Port 1 to port 2 de-energized
B-Port 2 to port 1 energized

SV2 - 20 (V) - C (*) - * * * - * * * * * *

1 2 3 4 5 6 7 8

1 Function

SV2 – Solenoid valve

2 Size

20 - 20 Size

3 Seals

Blank- Buna-N
V - Viton

4 Style

C - Normally closed

5 Manual override option

Blank - No manual override
M - Knob type
R - Cable type

6 Port size

0 - Cartridge only

Code	Port size	Housing number
8B	1” BSPP	02-175464
16T	SAE 16	566409
6G	3/4 ” BSPP	876732
8G	1” BSPP	876734
12H	SAE 12	876733
16H	SAE 16	876735

See pages 76 and 77 for housings

7 Voltage rating

00 - No coil
12D - 12VDC
24D - 24VDC
36D - 36VDC
24A - 24VAC
120A- 120VAC
240A- 240VAC
12B - 12VDC/w diode*
24B - 24VDC/w diode*

*optional arc suppression diode

8 Connector types

Blank - No coil

Voltage	**G** - ISO 4400 DIN 43650	**P** - 1/2” NPT conduit port w/ leadwire	**Q** - Spade terminals	**W** - Leadwire	**N** - Deutsch (DC only)	**Y** - Amp JR (DC only)
12D	02–178086	02-178078	02-178070	02-178063	02-178093	02-178711
24D	02–178087	02-178079	02-178073	02-178065	02-178094	02-178712
36D	02–178089	02-178080	02-178075	02-178066	02-178095	02-178713
24A	02–178112	02-178104	02-178103	02-178102	–	–
120A	02–178114	02-178106	–	–		
240A	02–178117	02-178109				
12B	02–178840	–	02-178834	02-178832	02-178842	02-178762
24B	02–178841		02-178835	02-178833	02-178843	02-178846

Dimensions

mm (inch)

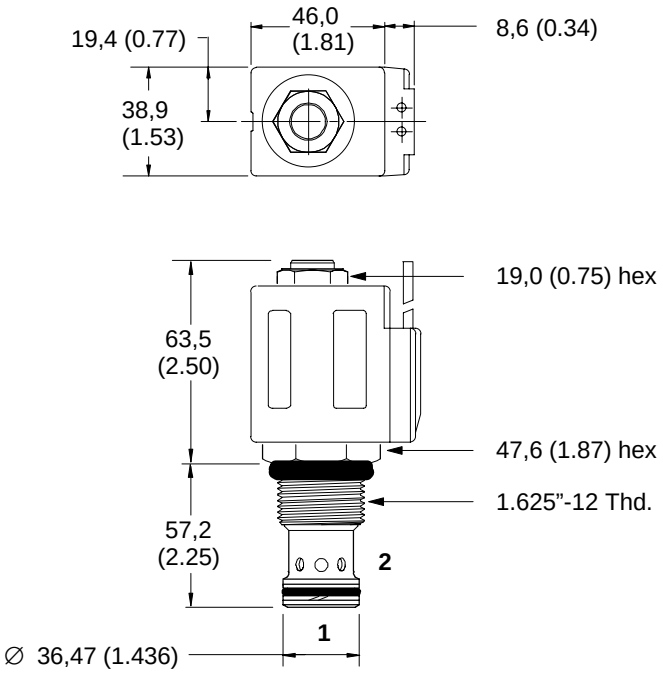

Torque cartridge in housing 128-155 Nm (95–115 lbf ft).

When solenoid valve is ordered as a cartridge only, nut is included.

Valve is shown with “W” coil. See page 81 for other coils.

For valve dimensions with manual override option installed see page 83

WARNING

Maintain 5-8 Nm (4-6 lbf ft) maximum torque on valve tube nut. Overtightening may cause valve failure.

SV4-8-C/CM

2-way, spool type, normally closed solenoid valve

Functional symbol

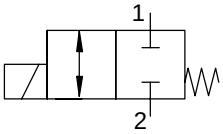

Sectional view

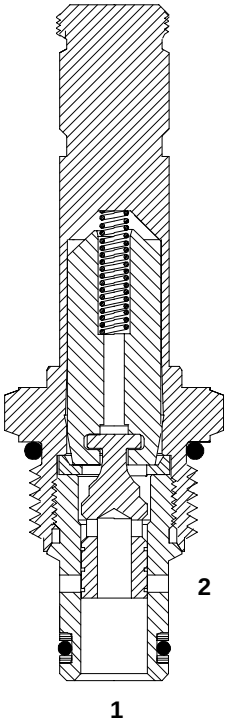

Description

The SV4-8-C is a two-way, two-position, spool type, direct acting, normally closed solenoid valve.

Operation

In the de-energized position, the SV4-8-C blocks flow in both directions. In the energized position, the spool lifts to allow flow in either direction.

Ratings and specifications

Performance data is typical with fluid at 21,8 cSt (105 SUS) and 49°C (120°F)

Typical application pressure (all ports)	210 bar (3000 psi)
Cartridge fatigue pressure (infinite life)	210 bar (3000 psi)
Rated flow	11 l/min (3 USgpm)
Internal leakage	82 cm^3/min (5 in^3/min.) max. @ 210 bar (3000 psi)
Coil duty	Continuous from 85% to 110% of nominal voltage
Response times (100% rated voltage and flow)	Energize: 27 ms De-energize: 24 ms
Temperature range	–40 to 120°C (–40° to 248°F)
Cavity	C-8-2 (See page 74)
Fluids	All general purpose hydraulic fluids such as: MIL-H-5606, SAE 10, SAE 20, etc.
Filtration	Cleanliness code 18/**16/13**
Standard housing material	Aluminum
Weight including coil	0,27 kg (0.60 lbs.)
Seal kit	02-160777 Buna-N 02-160778 Viton®

Viton is a registered trademark of E.I. DuPont Co.

Pressure Drop Curve

Cartridge only

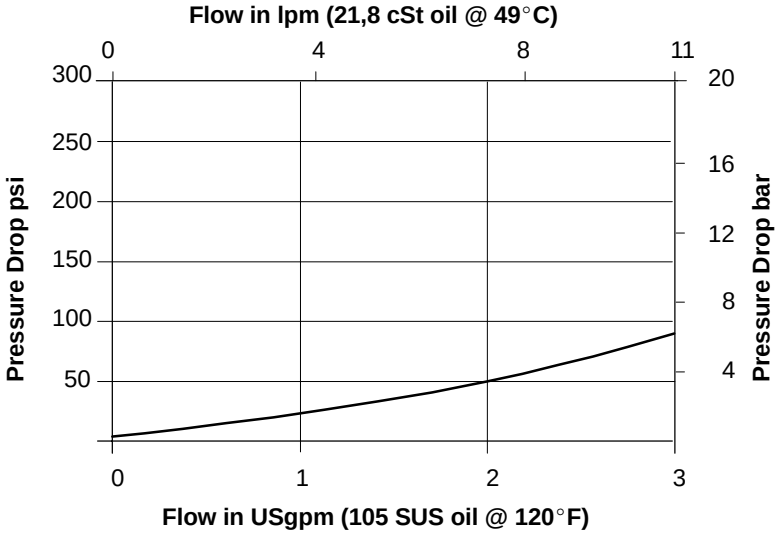

Port 1 to port 2 energized
Port 2 to port 1 energized

Model Code

SV4 - 8 (V) - C (M)-(A) - ** - ** * S**

1 2 3 4 5 6 7 8 9 10

1 Function

SV4 – Solenoid valve

2 Size

8 - 8 Size

3 Seals

Blank- Buna-N
V - Viton

4 Style

C - Normally closed

5 Manual override option

Blank - No manual override
M - Knob type

6 Valve housing material
Omit for cartridge only

A - Aluminum

7 Port size

0 - Cartridge only

Code	Port size	Housing number
2G	1/4” BSPP	02-160727
3G	3/8” BSPP	02-160728
4T	SAE 4	02-160730
6T	SAE 6	02-160731
8T	SAE 8	02-160732

See page 77 for housings

8 Voltage rating

00 - No coil
12D - 12VDC
24D - 24VDC
36D - 36VDC
24A - 24VAC
120A- 120VAC
240A- 240VAC
12B - 12VDC/w diode*
24B - 24VDC/w diode*

*optional arc suppression diode

9 Connector types

Blank - No coil

Voltage	**G** - ISO 4400 DIN 43650	**P** - 1/2” NPT conduit port w/ leadwire	**Q** - Spade terminals	**W** - Leadwire	**N** - Deutsch (DC only)	**Y** - Amp JR (DC only)
12D	02-160690	02-160684	02-160681	02-160678	02-160958	02-178001
24D	02-160691	02-160685	02-160682	02-160679	02-160959	02-178002
36D	02-160692	02-160686	02-160683	02-160680	02-160960	02-178003
24A	02-160702	02-160699	02-160696	02-160693	–	–
120A	02-160703	02-160700	–	–		
240A	02-160704	02-160701				
12B	02-178810	–	02-178804	02-178802	02-160953	02-160957
24B	02-178811		02-178805	02-178803	02-178812	02-178815

10 Series coil
S - 8-series coil, 16 W

Dimensions

mm (inch)

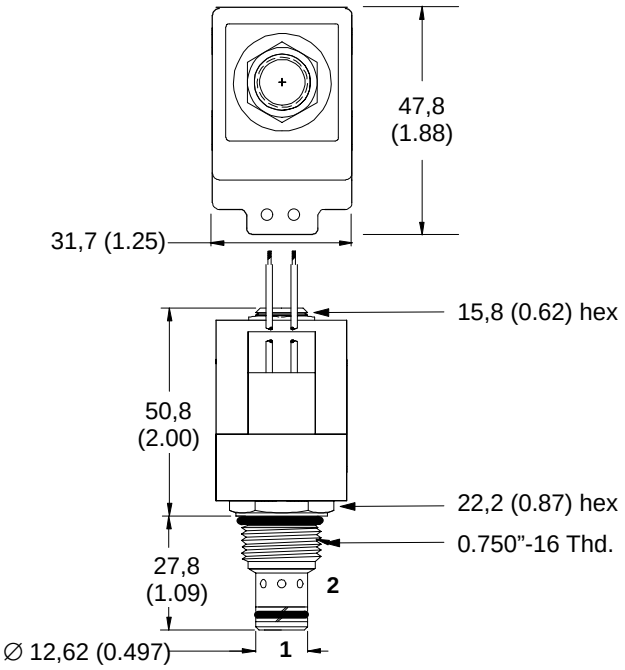

Torque cartridge in housing 34-41 Nm (25-30 lbf ft)

Valve is shown with “W” coil. See other coils on page 81.

Note
When solenoid valve is ordered as cartridge only, nut is included.

For valve dimensions with manual override option installed see page 83

WARNING

Maintain 5-8 Nm (4-6 lbf ft) maximum torque on valve tube nut. Overtightening may cause valve failure.

SV4-10-C/CM/CR

2-way, spool type, normally closed solenoid valve

Functional symbol

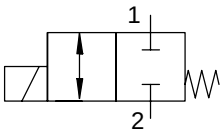

Sectional view

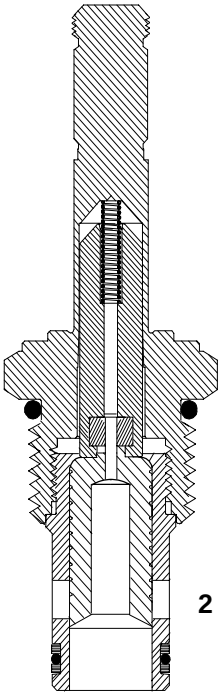

Description

The SV4-10-C is a 2-way, 2-position, direct acting, spool-type, normally closed screw-in cartridge solenoid valve.

Operation

In the de-energized position, flow is blocked in both directions. In the energized position, the spool lifts to allow flow in either direction.

Ratings and specifications

Performance data is typical with fluid at 21,8 cSt (105 SUS) and 49°C (120°F)

Typical application pressure (all ports) . . . . . 210 bar (3000 psi)

Cartridge fatigue pressure (infinite life) . . . . . 210 bar (3000 psi)

Rated flow . . . . . 23 l/min (6 USgpm)

Internal leakage . . . . . 82 cm^3 / min. (5 in^3 / min) max. @ 210 bar (3000 psi)

Temperature range . . . . . –40 to 120°C (–40° to 248°F)

Coil duty . . . . . Continuous from 85% to 110% of nominal voltage

Cavity . . . . . C-10-2 (See page 74)

Fluids . . . . . All general purpose hydraulic fluids such as: MIL-H-5606, SAE 10, SAE 20, etc.

Filtration . . . . . Cleanliness code 18/**16/13**

Standard housing material . . . . . Aluminum

Weight including coi . . . . . 0,4 kg (0.87 lb.)

Seal kit . . . . . 565806 Buna-N
889627 Viton®

Viton is a registered trademark of E.I. DuPont Co.

Pressure Drop Curve

Cartridge only

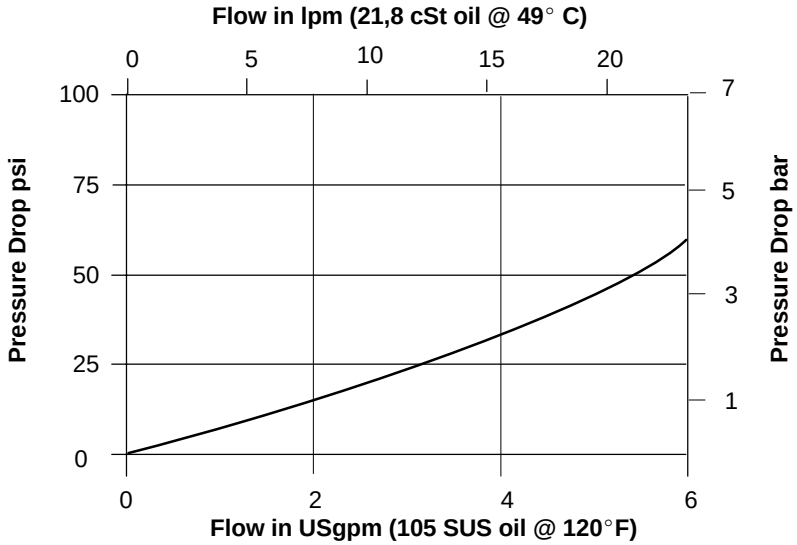

Port 1 to port 2 energized
Port 2 to port 1 de-energized

SV4 - 10 (V) - C (*) - ** - ** ***

1 2 3 4 5 6 7 8

1 Function

SV4 – Solenoid valve

2 Size

10 - 10 size

3 Seals

Blank- Buna-N
V - Viton

4 Style

C - Normally closed

5 Manual override option

Blank - No manual override
M - Knob type
R - Cable type

6 Port size

0 - Cartridge only

Code	Port size	Housing number
3B	3/8" BSPP	02-175462
6T	SAE 6	566151
2G	1/4 " BSPP	876702
3G	3/8" BSPP	876703
6H	SAE 6	876700
8H	SAE 8	876701

See pages 76 & 77 for housings

7 Voltage rating

00 - No coil
12D - 12VDC
24D - 24VDC
36D - 36VDC
24A - 24VAC
120A- 120VAC
240A- 240VAC
12B - 12VDC/w diode*
24B - 24VDC/w diode*

*optional arc suppression diode

8 Connector types

Blank - No coil

Voltage	**G** - ISO 4400 DIN 43650	**P** - 1/2" NPT conduit port w/ leadwire	**Q** - Spade terminals	**W** - Leadwire	**N** - Deutsch (DC only)	**Y** - Amp JR (DC only)
12D	02–178086	02-178078	02-178070	02-178063	02-178093	02-178711
24D	02–178087	02-178079	02-178073	02-178065	02-178094	02-178712
36D	02–178089	02-178080	02-178075	02-178066	02-178095	02-178713
24A	02–178112	02-178104	02-178103	02-178102	–	–
120A	02–178114	02-178106	–	–		
240A	02–178117	02-178109				
12B	02–178840	–	02-178834	02-178832	02-178842	02-178762
24B	02–178841		02-178835	02-178833	02-178843	02-178846

Dimensions

mm (inch)

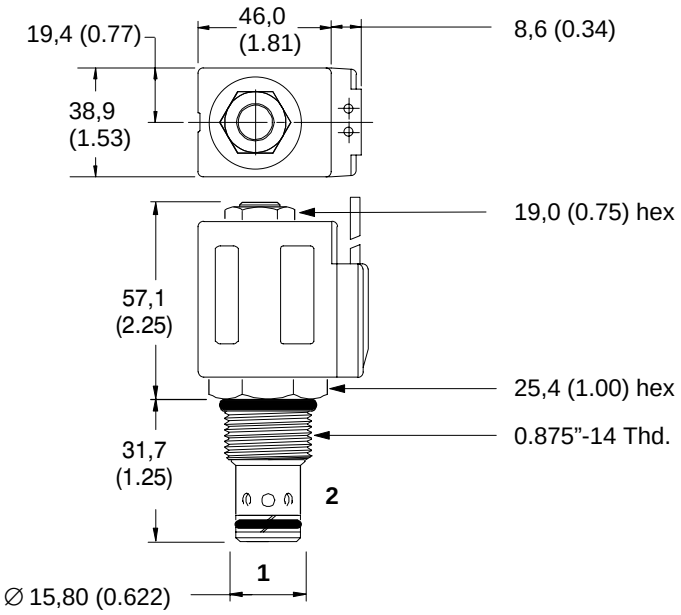

Torque cartridge in housing 47-54 Nm (35-40 lbf ft)

Valve is shown with "W" coil. See other coils on page 81.

Note
When solenoid valve is ordered as cartridge only, nut is included.

For valve dimensions with manual override option installed see page 83

WARNING

Maintain 5-8 Nm (4-6 lbf ft) maximum torque on valve tube nut. Overtightening may cause valve failure.

SV5-8-O/OP/OS

2-way, poppet type, normally open solenoid valve

Functional symbol

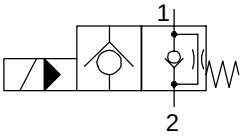

Sectional view

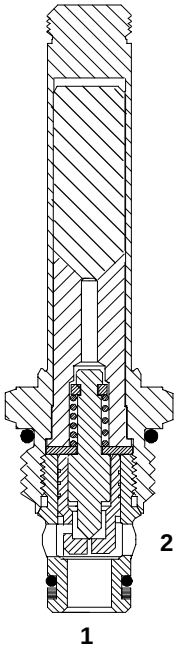

Description

The SV5-8-O is a 2-way, 2-position, poppet type, pilot operated, normally open, solenoid valve. This valve is used in applications requiring low leakage, such as single acting cylinder applications.

Operation

In the de-energized position, the SV5-8-O allows free flow from port 2 to port 1, and restricted flow from port 1 to port 2. In the energized position, flow is blocked from Port 2 to Port 1, and free flow is allowed from Port 1 to Port 2.

Ratings and specifications

Performance data is typical with fluid at 21,8 cSt (105 SUS) and 49°C (120°F)

Typical application pressure (all ports)	210 bar (3000 psi)
Cartridge fatigue pressure (infinite life)	210 bar (3000 psi)
Rated flow	23 l/min (6 USgpm)
Internal leakage	less than 5 drops / min. max. @ 210 bar (3000 psi) with valve energized
Coil duty	Continuous from 85% to 110% of nominal voltage
Response times (100% rated voltage and flow)	Energize: 24 ms De-energize: 25 ms
Temperature range	–40 to 120°C (–40° to 248°F)
Cavity	C-8-2 (See page 74)
Fluids	All general purpose hydraulic fluids such as: MIL-H-5606, SAE 10, SAE 20, etc.
Filtration	Cleanliness code 18/**16/13**
Standard housing material	Aluminum
Weight including coil	0,28 kg (0.62 lbs.)
Seal kit	02-165875 Buna-N, 02-165877 Viton®

Viton is a registered trademark of E.I. DuPont Co.

Pressure Drop Curves

Cartridge only

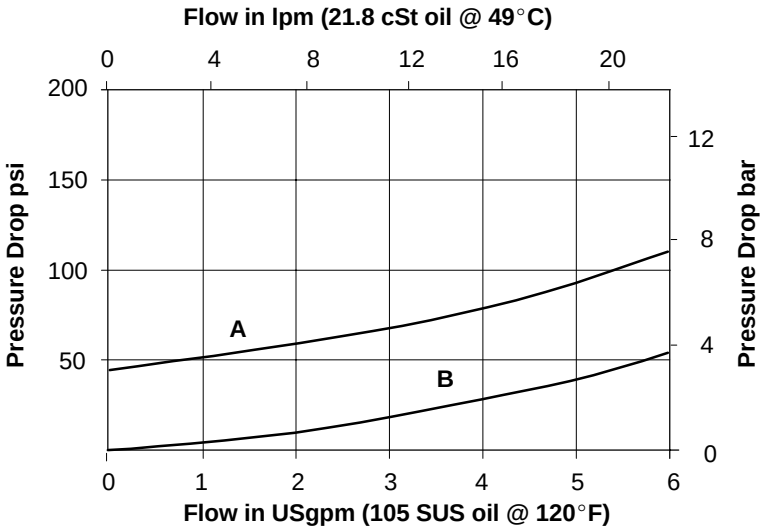

A-Port 1 to port 2 energized
B-Port 2 to port 1 de-energized

SV5 - 8 (V) - O (*)-(A) - ** - ** - * S**

1 2 3 4 5 6 7 8 9 10

1 Function

SV5 – Solenoid valve

2 Size

8 - 8 Size

3 Seals

Blank- Buna-N
V - Viton

4 Style

O - Normally open

5 Manual override option

Blank - No manual override
P - Push type
S - Screw type

6 Housing material
omit for cartridge only

A - Aluminum

7 Port size
0 - Cartridge only

Code	Port size	Housing number
2G	1/4" BSPP	02-160727
3G	3/8" BSPP	02-160728
4T	SAE 4	02-160730
6T	SAE 6	02-160731
8T	SAE 8	02-160732

See page 77 for housings

8 Voltage rating

00 - No coil
12D - 12VDC
24D - 24VDC
36D - 36VDC
24A - 24VAC
120A- 120VAC
240A- 240VAC
12B - 12VDC/w diode*
24B - 24VDC/w diode*

*optional arc suppression diode

9 Connector types

Blank - No coil

Voltage	**G** - ISO 4400 DIN 43650	**P** - 1/2" NPT conduit port w/ leadwire	**Q** - Spade terminals	**W** - Leadwire	**N** - Deutsch (DC only)	**Y** - Amp JR (DC only)
12D	02-160690	02-160684	02-160681	02-160678	02-160958	02-178001
24D	02-160691	02-160685	02-160682	02-160679	02-160959	02-178002
36D	02-160692	02-160686	02-160683	02-160680	02-160960	02-178003
24A	02-160702	02-160699	02-160696	02-160693	–	–
120A	02-160703	02-160700	–	–		
240A	02-160704	02-160701				
12B	02-178810	–	02-178804	02-178802	02-160953	02-160957
24B	02-178811		02-178805	02-178803	02-178812	02-178815

10 Series coil

S 8-series coil

Dimensions

mm (inch)

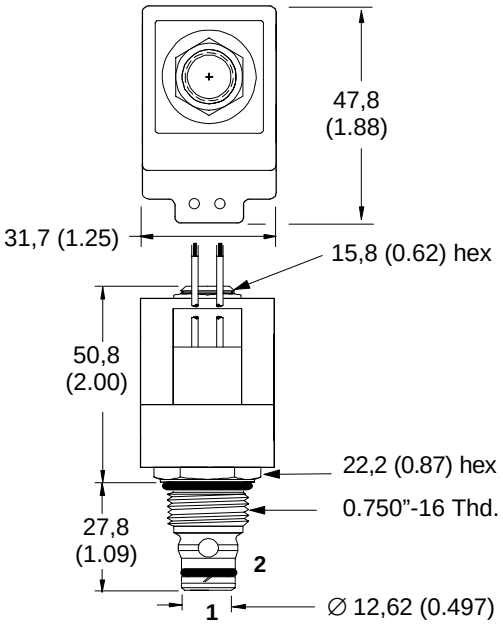

Torque cartridge in housing 34-41 Nm (25-30 lbf ft)

Valve is shown with "W" coil. See other coils on page 80.

Note
When solenoid valve is ordered as cartridge only, nut is included.

For valve dimensions with manual override option installed see page 83

WARNING

Maintain 5-8 Nm (4-6 lbf ft) maximum torque on valve tube nut. Overtightening may cause valve failure.

SV3-10-O/OP/OS

2-way, poppet type, normally open solenoid valve

Functional symbol

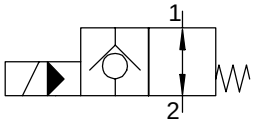

Sectional view

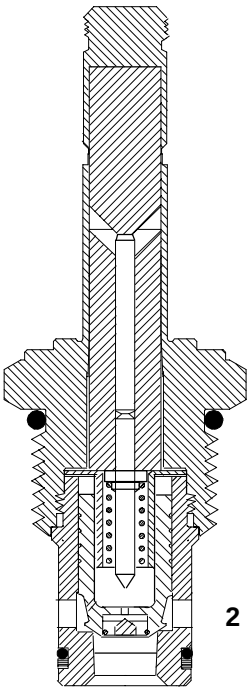

Description

The SV3-10-O is a 2-way, 2-position, poppet type, pilot operated, normally open, screw-in cartridge solenoid valve.

Operation

In the de-energized position, this valve allows bi-directional flow between port 1 and port 2. In the energized position, flow is blocked from port 2 to port 1, and is allowed from port 1 to port 2 when coil forces are overcome.

Ratings and specifications

Performance data is typical with fluid at 21,8 cSt (105 SUS) and 49°C (120°F)

Typical application pressure (all ports) . . . . . 210 bar (3000 psi)

Cartridge fatigue pressure (infinite life) . . . . . 210 bar (3000 psi)

Rated flow . . . . . 45 l/min (12 USgpm)

Internal leakage port 2 to port 1 . . . less than 5 drops / min. max. @ 210 bar (3000 psi)

Temperature range . . . . . –40° to 120° C (–40° to 248°F)

Coil duty . . . . . Continuous from 85% to 110% nominal voltage

Cavity . . . . . C-10-2 (See page 74)

Fluids . . . . . All general purpose hydraulic fluids such as: MIL-H-5606, SAE 10, SAE 20, etc.

Filtration . . . . . Cleanliness code 18**/16/13**

Standard housing material . . . . . Aluminum

Weight including coil . . . . . 0,4 kg (0.87 lb.)

Seal kit . . . . . 565803 Buna-N
566086 Viton®

Viton is a registered trademark of E.I. DuPont Co.

Pressure Drop Curve

Cartridge only

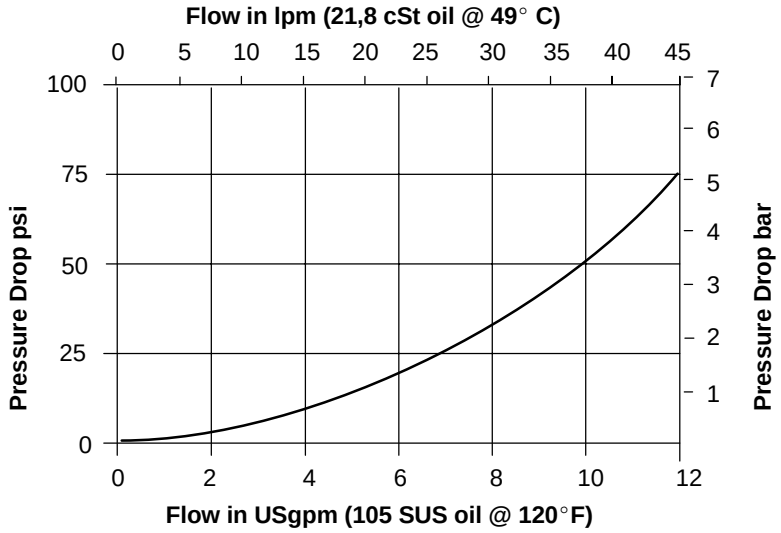

Port 1 to port 2
and port 2 to port 1 de-energized

SV3 - 10 (V) - O(*) - ** - ** ***

1 2 3 4 5 6 7 8

1 Function

SV3 - Solenoid valve

2 Size

10 - 10 size

3 Seals

Blank - Buna-N
V - Viton

4 Style

O - Normally open

5 Manual override option

Blank - No manual override
P - Push type
S - Screw type

6 Port size

0 - Cartridge only

Code	Port size	Housing number
3B	3/8" BSPP	02-175462
6T	SAE 6	566151
2G	1/4 " BSPP	876702
3G	3/8" BSPP	876703
6H	SAE 6	876700
8H	SAE 8	876701

See pages 76 & 77 for housings

7 Voltage rating

00 - No coil
12D - 12VDC
24D - 24VDC
36D - 36VDC
24A - 24VAC
120A - 120VAC
240A - 240VAC
12B - 12VDC/w diode*
24B - 24VDC/w diode*

*optional arc suppression diode

8 Connector types

Blank - No coil

Voltage	**G** - ISO 4400 DIN 43650	**P** - 1/2" NPT conduit port w/ leadwire	**Q** - Spade terminals	**W** - Leadwire	**N** - Deutsch (DC only)	**Y** - Amp JR (DC only)
12D	02–178086	02-178078	02-178070	02-178063	02-178093	02-178711
24D	02–178087	02-178079	02-178073	02-178065	02-178094	02-178712
36D	02–178089	02-178080	02-178075	02-178066	02-178095	02-178713
24A	02–178112	02-178104	02-178103	02-178102	–	–
120A	02–178114	02-178106	–	–		
240A	02–178117	02-178109				
12B	02–178840	–	02-178834	02-178832	02-178842	02-178762
24B	02–178841		02-178835	02-178833	02-178843	02-178846

Dimensions

mm (inch)

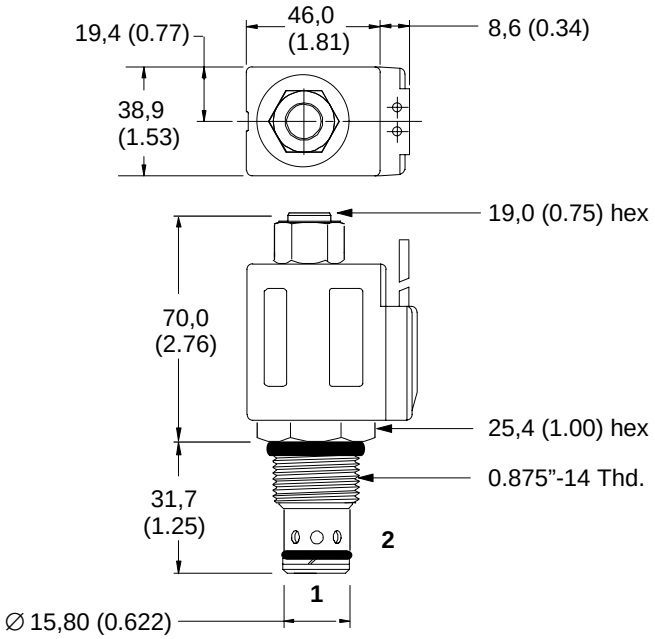

Torque cartridge in housing 47-54 Nm (35-40 lbf ft)

Valve is shown with "W" coil. See other coils on page 81.

Note
When solenoid valve is ordered as cartridge only, nut is included.

For valve dimensions with manual override option installed see page 83

WARNING

Maintain 5-8 Nm (4-6 lbf ft) maximum torque on valve tube nut. Overtightening may cause valve failure.

SV5-10-O/OP/OS

2-way, poppet type, normally open solenoid valve

Functional symbol

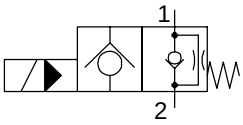

Sectional view

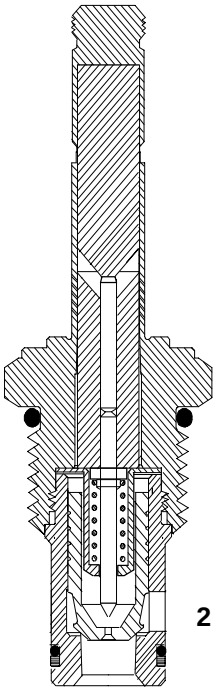

Description

The SV5-10-O is a 2-way, 2-position, poppet type, pilot operated, normally open, screw-in cartridge solenoid valve.

Operation

In the de-energized position, flow from port 1 to port 2 is restricted while free flow is allowed from port 2 to port 1. In the energized position, flow is blocked from port 2 to port 1, and flow is allowed from port 1 to port 2 when coil forces are overcome.

Ratings and specifications

Performance data is typical with fluid at 21,8 cSt (105 SUS) and 49°C (120°F)

Typical application pressure (all ports)	210 bar (3000 psi)
Cartridge fatigue pressure (infinite life)	210 bar (3000 psi)
Rated flow	45 l/min (12 USgpm)
Internal leakage port 2 to port 1	less than 5 drops / min. max. @ 210 bar (3000 psi)
Temperature range	–40 to 120°C (–40° to 248°F)
Coil duty	Continuous from 85% to 110% nominal voltage
Cavity	C-10-2 (See page 74)
Fluids	All general purpose hydraulic fluids such as: MIL-H-5606, SAE 10, SAE 20, etc.
Filtration	Cleanliness code 18**/16/13**
Standard housing material	Aluminum
Weight including coil	0,4 kg (0.87 lb.)
Seal kit	565803 Buna-N 566086 Viton®

Viton is a registered trademark of E.I. DuPont Co.

Pressure Drop Curve

Cartridge only

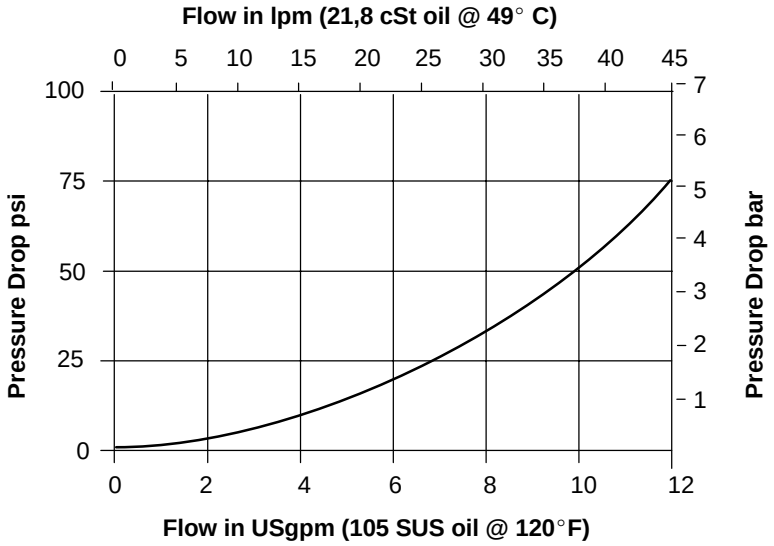

Port 1 to port 2
and port 2 to port 1 de-energized

SV5-10 (V) -O (*) - * * - ** ***

1 2 3 4 5 6 7 8

1 Function

SV5 - Solenoid valve

2 Size

10 - 10 size

3 Seals

Blank - Buna-N
V - Viton

4 Style

O - Normally open

5 Manual override option

Blank - No manual override
P - Push type
S - Screw type

6 Port size

0 - Cartridge only

Code	Port size	Housing number
3B	3/8” BSPP	02-175462
6T	SAE 6	566151
2G	1/4 ” BSPP	876702
3G	3/8” BSPP	876703
6H	SAE 6	876700
8H	SAE 8	876701

See pages 76 & 77 for housings

7 Voltage rating

00 - No coil
12D - 12VDC
24D - 24VDC
36D - 36VDC
24A - 24VAC
120A - 120VAC
240A - 240VAC
12B - 12VDC/w diode*
24B - 24VDC/w diode*

*optional arc suppression diode

8 Connector types

Blank - No coil

Voltage	**G** - ISO 4400 DIN 43650	**P** - 1/2” NPT conduit port w/ leadwire	**Q** - Spade terminals	**W** - Leadwire	**N** - Deutsch (DC only)	**Y** - Amp JR (DC only)
12D	02–178086	02-178078	02-178070	02-178063	02-178093	02-178711
24D	02–178087	02-178079	02-178073	02-178065	02-178094	02-178712
36D	02–178089	02-178080	02-178075	02-178066	02-178095	02-178713
24A	02–178112	02-178104	02-178103	02-178102	–	–
120A	02–178114	02-178106	–	–		
240A	02–178117	02-178109				
12B	02–178840	–	02-178834	02-178832	02-178842	02-178762
24B	02–178841		02-178835	02-178833	02-178843	02-178846

Dimensions

mm (inch)

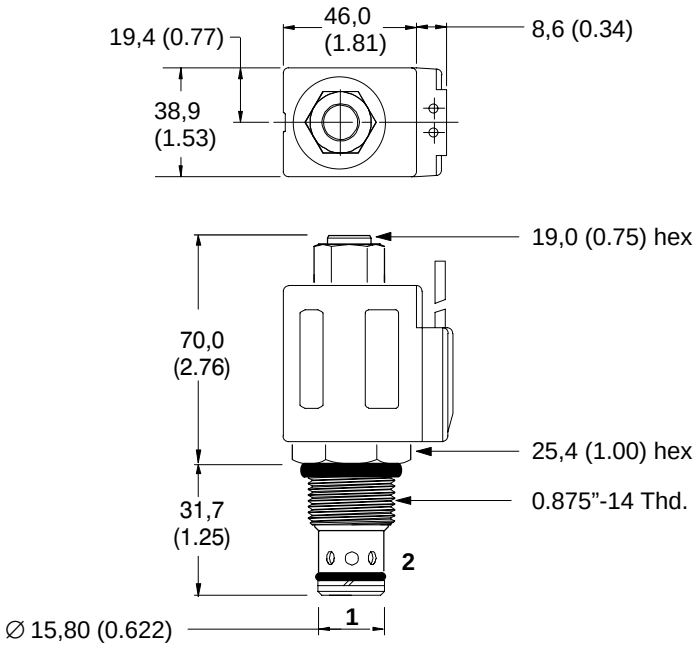

Torque cartridge in housing 47-54 Nm (35-40 lbf ft)

Valve is shown with “W” coil. See other coils on page 81.

Note
When solenoid valve is ordered as cartridge only, nut is included.

For valve dimensions with manual override option installed see page 83

WARNING

Maintain 5-8 Nm (4-6 lbf ft) maximum torque on valve tube nut. Overtightening may cause valve failure.

SV3-12-O/OP/OS

2-way, poppet type, normally open solenoid valve

Functional symbol

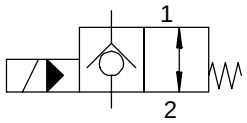

Sectional view

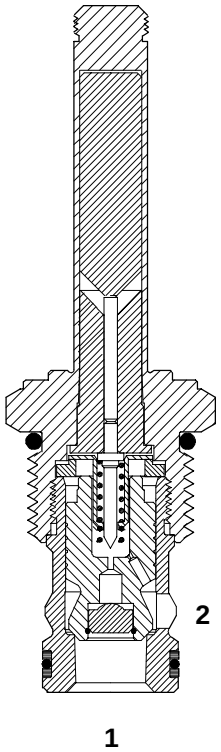

Description

The SV3-12-O is a 2-way, 2-position, poppet-type, pilot-operated, normally open solenoid cartridge valve.

Operation

In the de-energized position, flow can pass through the valve from port 1 to port 2, or from port 2 to port 1. In the energized position, flow is blocked from port 2 to port 1, and allowed from port 1 to port 2 when the coil force is overcome.

Ratings and specifications

Performance data is typical with fluid at 21,8 cSt (105 SUS) and 49°C (120°F)

Typical application pressure (port 1 to port 2) . . . . . 210 bar (3000 psi)

Cartridge fatigue pressure (infinite life) . . . . . 210 bar (3000 psi)

Rated flow . . . . . 114 l/min (30 USgpm)

Internal leakage port (port 2 to port 1)..less than 5 drops / min. max. @ 210 bar (3000 psi)

Temperature range . . . . . –40 to 120°C (–40° to 248°F)

Coil duty . . . . . Continuous fro 85% to 110% nominal voltage

Response time (100% rated flow and voltage) . . . . . Energize: 75 ms
De-energize: 150 ms

Cavity . . . . . C-12-2 or C-12-2U (See page 74)

Fluids . . . . . All general purpose hydraulic fluids such as:
MIL-H-5606, SAE 10, SAE 20, etc.

Filtration . . . . . Cleanliness code 17/**15/12**

Standard housing material . . . . . Aluminum

Weight including coil . . . . . 0,336 kg (0.74 lb.)

Seal kit . . . . . 02-165889 Buna-N
02-165888 Viton®

Viton is a registered trademark of E.I. DuPont Co.

Pressure Drop Curves

Cartridge only

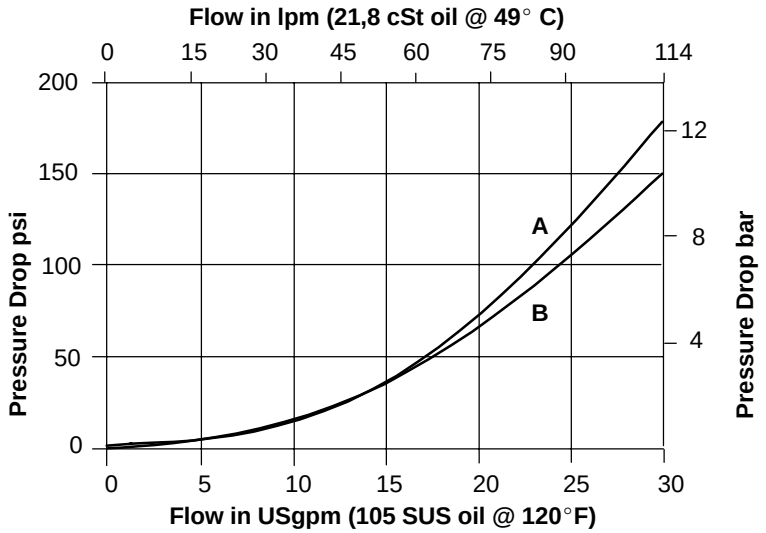

A -Port 2 to port 1 de-energized
B -Port 1 to port 2 energized

SV3 - 12 (V) - O (*) - (A) - * - (U) - **** ***

1 2 3 4 5 6 7 8 9 10

1 Function

SV3 - Solenoid valve

2 Size

12 - 12 size

3 Seals

Blank - Buna-N
V - Viton

4 Style

O - Normally open

5 Manual override option

Blank - No manual override
P - Push type
S - Screw type

6 Valve housing material
Omit for cartridge only

A - Aluminum

7 Port size

0 - Cartridge only

Code	Port size	Housing number
4G	1/2" BSPP	02-161118 (C-12-2)
6G	3/4 " BSPP	02-161117 (C-12-2)
10T	SAE 10	02-160640 (C-12-2)
12T	SAE 12	02-160644 (C-12-2)
4G	1/2" BSPP	02-161116 (C-12-2U)
6G	3/4 " BSPP	02-161115 (C-12-2U)
10T	SAE 10	02-160641 (C-12-2U)
12T	SAE 12	02-160645 (C-12-2U)

See page 77 for housings

8 Cavity

Blank - Cavity w/o undercut
U - Cavity w/undercut

9 Voltage rating

00 - No coil
12D - 12VDC
24D - 24VDC
36D - 36VDC
24A - 24VAC
120A- 120VAC
240A- 240VAC
12B - 12VDC/w diode*
24B - 24VDC/w diode*

*optional arc suppression diode

10 Connector types

Blank - No coil

Voltage	**G** - ISO 4400 DIN 43650	**P** - 1/2" NPT conduit port w/ leadwire	**Q** - Spade terminals	**W** - Leadwire	**N** - Deutsch (DC only)	**Y** - Amp JR (DC only)
12D	02–178086	02-178078	02-178070	02-178063	02-178093	02-178711
24D	02–178087	02-178079	02-178073	02-178065	02-178094	02-178712
36D	02–178089	02-178080	02-178075	02-178066	02-178095	02-178713
24A	02–178112	02-178104	02-178103	02-178102	–	–
120A	02–178114	02-178106	–	–		
240A	02–178117	02-178109				
12B	02–178840	–	02-178834	02-178832	02-178842	02-178762
24B	02–178841		02-178835	02-178833	02-178843	02-178846

Dimensions

mm (inch)

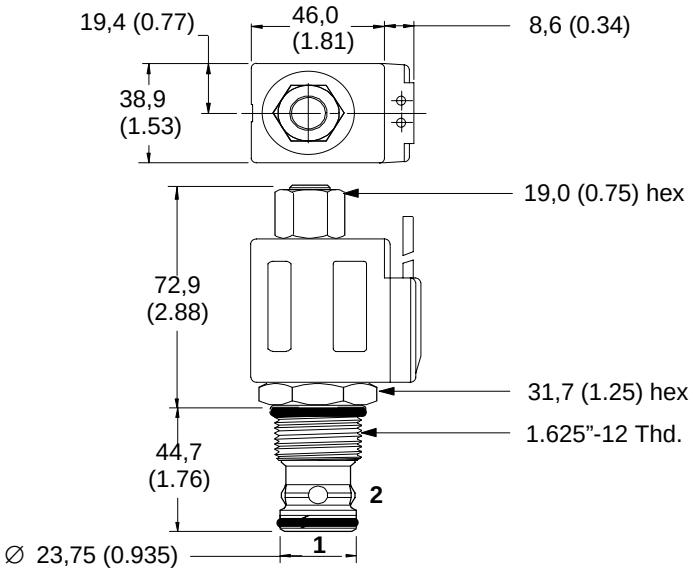

Torque cartridge in housing 81-95 Nm (60-70 lbf ft)

Valve is shown with "W" coil. See other coils on page 81.

Note
When solenoid valve is ordered as cartridge only, nut is included.

For valve dimensions with manual override option installed see page 83

WARNING

Maintain 5-8 Nm (4-6 lbf ft) maximum torque on valve tube nut. Overtightening may cause valve failure.

SV3-16-O/OP/OS

2-way, poppet type, normally open solenoid valve

Functional symbol

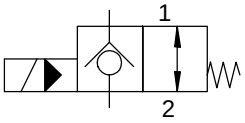

Sectional view

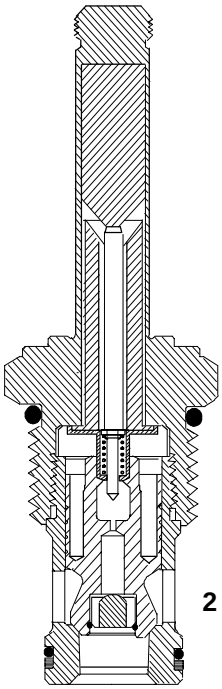

Description

The SV3-16-O is a 2-way, 2-position, poppet type, pilot operated, normally open, screw-in cartridge solenoid valve.

Operation

In the de-energized position, this valve allows bi-directional flow between port 1 and port 2. In the energized position, flow is blocked from port 2 to port 1 and allowed from port 1 to port 2 when coil forces are overcome.

Ratings and specifications

Performance data is typical with fluid at 21,8 cSt (105 SUS) and 49°C (120°F)

Typical application pressure (all ports) . . . . . 210 bar (3000 psi)

Cartridge fatigue pressure (infinite life) . . . . . 210 bar (3000 psi)

Rated flow . . . . . 132 l/min (35 USgpm)

Internal leakage port 2 to port 1 . . . less than 5 drops / min. max. @ 210 bar (3000 psi)

Temperature range . . . . . –40 to 120°C (–40° to 248°F)

Coil duty . . . . . Continuous from 85% to 110% nominal voltage

Cavity . . . . . C-16-2 (See page 74)

Fluids . . . . . All general purpose hydraulic fluids such as: MIL-H-5606, SAE 10, SAE 20, etc.

Filtration . . . . . Cleanliness code 18**/16/13**

Standard housing material . . . . . Aluminum

Weight including coil . . . . . 0,9 kg (1.98 lb.)

Seal kit . . . . . 565810 Buna-N
889609 Viton®

Viton is a registered trademark of E.I. DuPont Co.

Pressure Drop Curves

Cartridge only

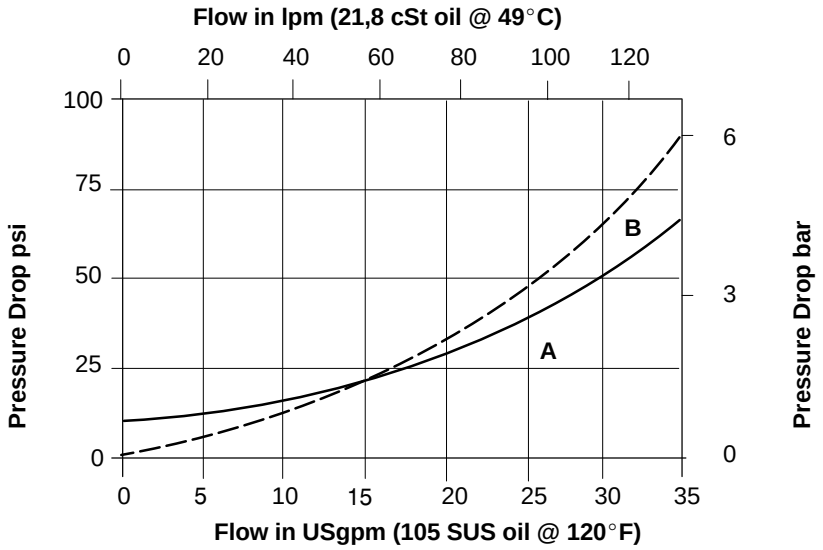

A -Port 1 to port 2 energized
B -Port 2 to port 1 de-energized

SV3-16 (V)- O (*)-*- **** ***

1 2 3 4 5 6 7 8

1 Function

SV3 – Solenoid valve

2 Size

16 - 16 Size

3 Seals

Blank- Buna-N
V - Viton

4 Style

O - Normally open

5 Manual override option

Blank - No manual override
P - Push type
S – Screw type

6 Port size

0 - Cartridge only

Code	Port size	Housing number
6B	3/4" BSPP	02-175463
12T	SAE 12	566149
6G	3/4 " BSPP	876718
10H	SAE 10	876717
12H	SAE 12	566113

See pages 76 and 77 for housings

7 Voltage rating

00 - No coil
12D - 12VDC
24D - 24VDC
36D - 36VDC
24A - 24VAC
120A- 120VAC
240A- 240VAC
12B - 12VDC/w diode*
24B - 24VDC/w diode*

*optional arc suppression diode

8 Connector types

Blank - No coil

Voltage	**G** - ISO 4400 DIN 43650	**P** - 1/2" NPT conduit port w/ leadwire	**Q** - Spade terminals	**W** - Leadwire	**N** - Deutsch (DC only)	**Y** - Amp JR (DC only)
12D	02–178086	02-178078	02-178070	02-178063	02-178093	02-178711
24D	02–178087	02-178079	02-178073	02-178065	02-178094	02-178712
36D	02–178089	02-178080	02-178075	02-178066	02-178095	02-178713
24A	02–178112	02-178104	02-178103	02-178102	–	–
120A	02–178114	02-178106	–	–		
240A	02–178117	02-178109				
12B	02–178840	–	02-178834	02-178832	02-178842	02-178762
24B	02–178841		02-178835	02-178833	02-178843	02-178846

Dimensions
mm (inch)

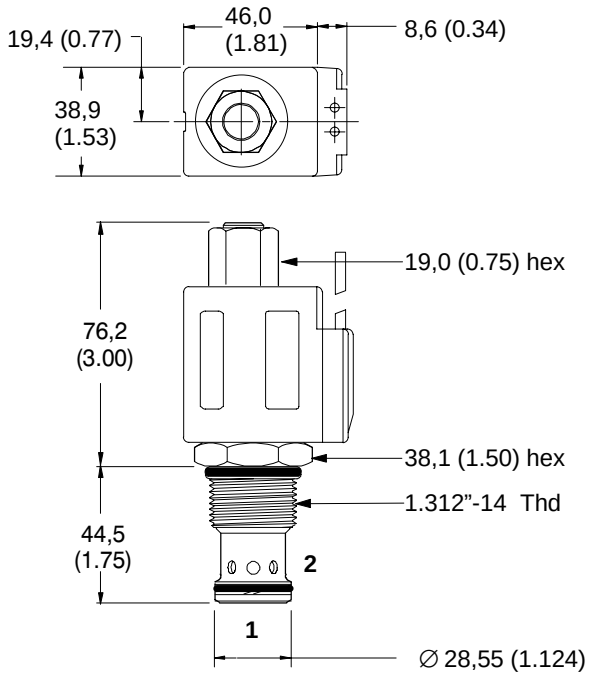

Torque cartridge in housing 108-122 Nm (80-90 lbf ft)

Valve is shown with "W" coil. See other coils on page 81.

Note
When solenoid valve is ordered as cartridge only, nut is included.

For valve dimensions with manual override option installed see page 83

WARNING

Maintain 5-8 Nm (4-6 lbf ft) maximum torque on valve tube nut. Overtightening may cause valve failure.

SV3-20-O/OP/OS

2-way, poppet type, normally open solenoid valve

Functional symbol

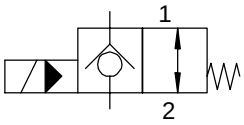

Sectional view

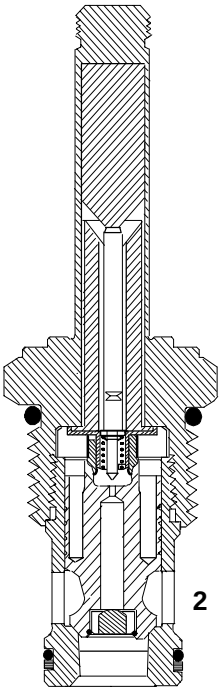

Description

The SV3-20-O is a 2-way, 2-position, poppet type, pilot operated, normally open, screw-in cartridge solenoid valve.

Operation

In the de-energized position, this valve allows bi-directional flow between port 1 and port 2. In the energized position, flow is blocked from port 2 to port 1 and allowed from port 1 to port 2 when coil forces are overcome.

Ratings and specifications

Performance data is typical with fluid at 21,8 cSt (105 SUS) and 49°C (120°F)

Typical application pressure (all ports) . . . . . 210 bar (3000 psi)

Cartridge fatigue pressure (infinite life) . . . . . 210 bar (3000 psi)

Rated flow . . . . . 227 l/min (60 USgpm)

Internal leakage port 2 to port 1 . . . less than 5 drops / min. max. @ 210 bar (3000 psi)

Temperature range . . . . . –40 to 120°C (–40° to 248°F)

Coil duty . . . . . Continuous from 85% to 110% nominal voltage

Cavity . . . . . C-20-2 (See page 74)

Fluids . . . . . All general purpose hydraulic fluids such as: MIL-H-5606, SAE 10, SAE 20, etc.

Filtration . . . . . Cleanliness code 18**/16/13**

Standard housing material . . . . . Aluminum

Weight including coil . . . . . 1,2 kg (2.70 lb.)

Seal kit . . . . . 889615 Buna-N
889619 Viton®

Viton is a registered trademark of E.I. DuPont Co.

Pressure Drop Curves

Cartridge only

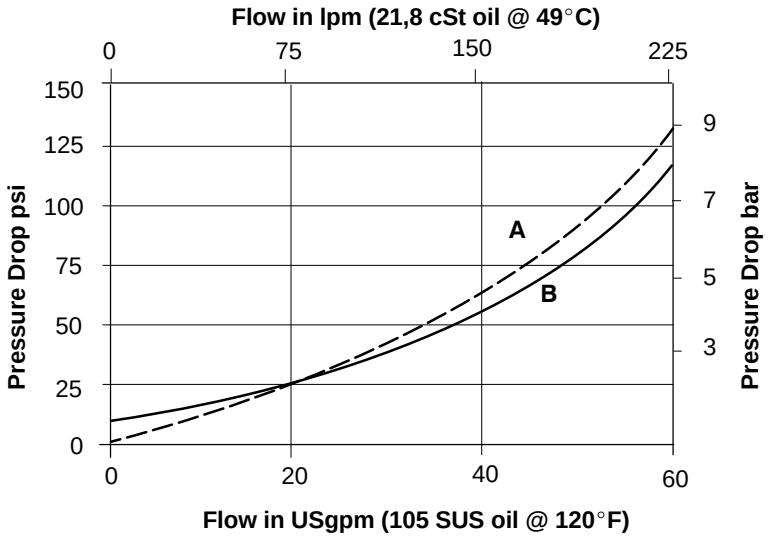

A-Port 2 to port 1
and port 1 to port 2 de-energized
B-Port 1 to Port 2 energized

SV3 - 20 (V) - O (*) - * - **** ***

1 2 3 4 5 6 7 8

1 Function

SV3 – Solenoid valve

2 Size

20 - 20 Size

3 Seals

Blank- Buna-N
V - Viton

4 Style

O - Normally open

5 Manual override option

Blank - No manual override
P - Push type
S - Screw type

6 Port size

0 - Cartridge only

Code	Port size	Housing number
8B	1” BSPP	02-175464
16T	SAE 16	566409
6G	3/4” BSPP	876732
8G	1” BSPP	876734
12H	SAE 12	876733
16H	SAE 16	876735

See pages 76 & 77 for housings

7 Voltage rating

00 - No coil
12D - 12VDC
24D - 24VDC
36D - 36VDC
24A - 24VAC
120A- 120VAC
240A- 240VAC
12B - 12VDC/w diode*
24B - 24VDC/w diode*

*optional arc suppression diode

8 Connector types

Blank - No coil

Voltage	**G** - ISO 4400 DIN 43650	**P** - 1/2” NPT conduit port w/ leadwire	**Q** - Spade terminals	**W** - Leadwire	**N** - Deutsch (DC only)	**Y** - Amp JR (DC only)
12D	02–178086	02-178078	02-178070	02-178063	02-178093	02-178711
24D	02–178087	02-178079	02-178073	02-178065	02-178094	02-178712
36D	02–178089	02-178080	02-178075	02-178066	02-178095	02-178713
24A	02–178112	02-178104	02-178103	02-178102	–	–
120A	02–178114	02-178106	–	–		
240A	02–178117	02-178109				
12B	02–178840	–	02-178834	02-178832	02-178842	02-178762
24B	02–178841		02-178835	02-178833	02-178843	02-178846

Dimensions

mm (inch)

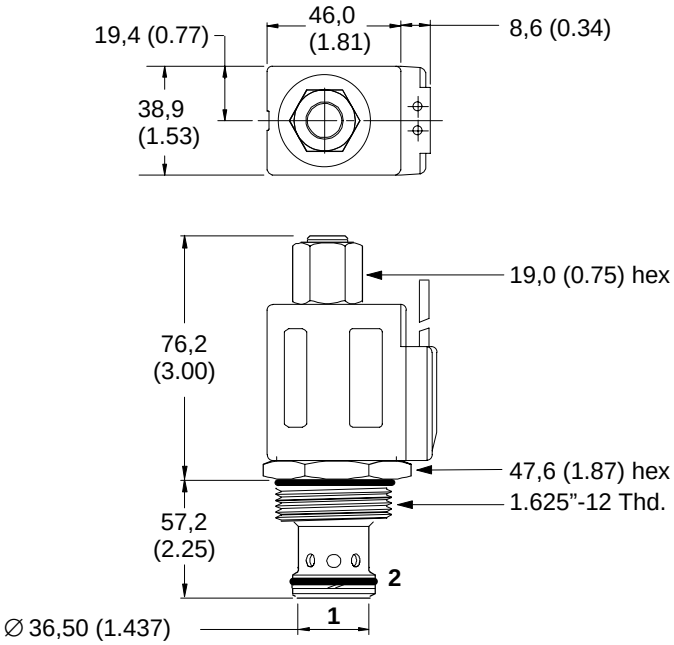

Torque cartridge in housing 128-155 Nm (95-115 lbf ft)

Valve is shown with “W” coil. See other coils on page 81.

Note
When solenoid valve is ordered as cartridge only, nut is included.

For valve dimensions with manual override option installed see page 83

WARNING

Maintain 5-8 Nm (4-6 lbf ft) maximum torque on valve tube nut. Overtightening may cause valve failure.

SV4-8-O/OM

2-way, poppet type, normally open solenoid valve

Functional symbol

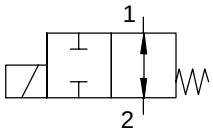

Sectional view

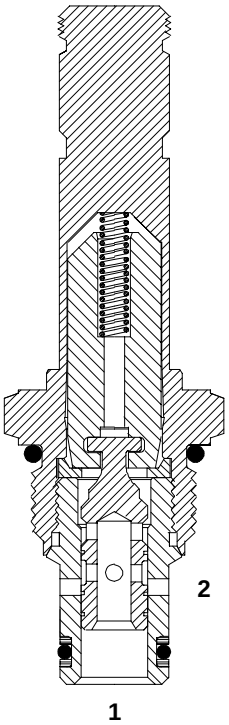

Description

The SV4-8-O is a 2-way, spool type, direct acting, normally open, solenoid valve.

Operation

In the de-energized position, the SV4-8-O valve allows bi-directional flow between ports 1 and 2. In the energized position, both ports 1 and 2 are blocked.

Ratings and specifications

Performance data is typical with fluid at 21,8 cSt (105 SUS) and 49°C (120°F)

Typical application pressure (all ports) . . . . . 210 bar (3000 psi)

Cartridge fatigue pressure (infinite life) . . . . . 210 bar (3000 psi)

Rated flow . . . . . 13 l/min (4 USgpm)

Internal leakage . . . . . 82 cm^3/min (5 in^3/min.) max. @ 210 bar (3000 psi)

Coil duty . . . . . Continuous from 85% to 110% of nominal range)

Response times (100% rated voltage and flow) . . . . . Energize: 21 ms
De-energize: 38 ms

Temperature range . . . . . –40 to 120°C (–40° to 248°F)

Cavity . . . . . C-8-2 (See page 74)

Fluids . . . . . All general purpose hydraulic fluids such as:
MIL-H-5606, SAE 10, SAE 20, etc.

Filtration . . . . . Cleanliness code 18/**16/13**

Standard housing material . . . . . Aluminum

Weight including coil . . . . . 0,27 kg (0.60 lbs.)

Seal kit . . . . . 02-160777 Buna-N
02-160778 Viton®

Viton is a registered trademark of E.I. DuPont Co.

Pressure Drop Curve

Cartridge only

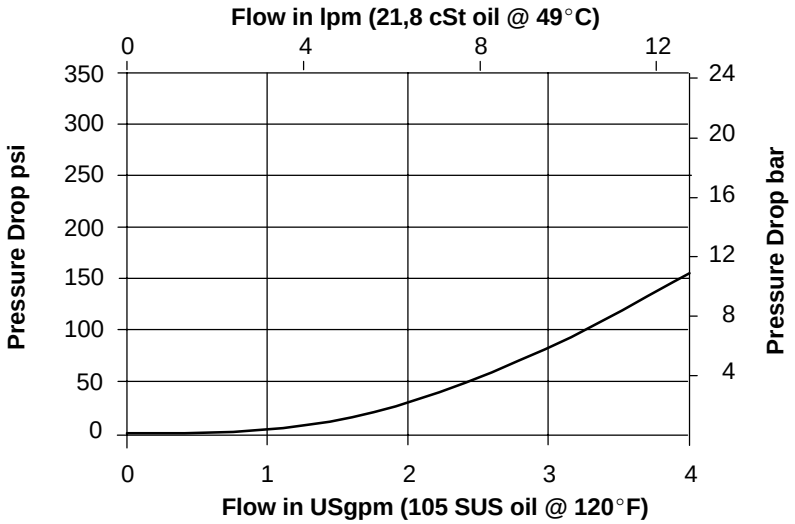

Port 2 to port 1 de-energized
and port 1 to port 2 de-energized

SV4 - 8 (V) - O (M) - (A) - ** - ** * S**

1 2 3 4 5 6 7 8 9 10

1 Function

SV4 – Solenoid valve

2 Size

8 - 8 Size

3 Seals

Blank- Buna-N
V - Viton

4 Style

O - Normally open

5 Manual override option

Blank - No manual override
M - Knob type

6 Valve housing material

Omit for cartridge only

A - Aluminum

7 Port size

0 - Cartridge only

Code	Port size	Housing number
2G	1/4" BSPP	02-160727
3G	3/8" BSPP	02-160728
4T	SAE 4	02-160730
6T	SAE 6	02-160731
8T	SAE 8	02-160732

See page 77 for housings

8 Voltage rating

00 - No coil
12D - 12VDC
24D - 24VDC
36D - 36VDC
24A - 24VAC
120A- 120VAC
240A- 240VAC
12B - 12VDC/w diode*
24B - 24VDC/w diode*

*optional arc suppression diode

9 Connector types

Blank - No coil

Voltage	**G** - ISO 4400 DIN 43650	**P** - 1/2" NPT conduit port w/ leadwire	**Q** - Spade terminals	**W** - Leadwire	**N** - Deutsch (DC only)	**Y** - Amp JR (DC only)
12D	02-160690	02-160684	02-160681	02-160678	02-160958	02-178001
24D	02-160691	02-160685	02-160682	02-160679	02-160959	02-178002
36D	02-160692	02-160686	02-160683	02-160680	02-160960	02-178003
24A	02-160702	02-160699	02-160696	02-160693	–	–
120A	02-160703	02-160700	–	–		
240A	02-160704	02-160701				
12B	02-178810	–	02-178804	02-178802	02-160953	02-160957
24B	02-178811		02-178805	02-178803	02-178812	02-178815

10 Series coil

S - 8-series coil, 16 W

Dimensions

mm (inch)

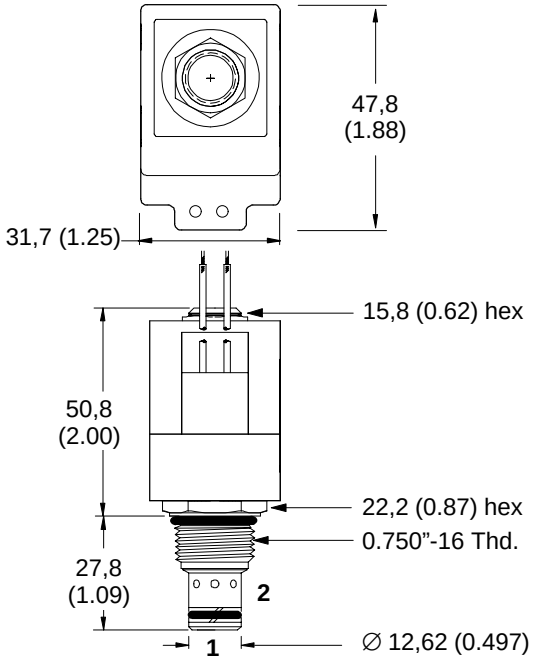

Torque cartridge in housing 34-41 Nm (25-30 lbf ft)

Valve is shown with "W" coil. See other coils on page 80.

Note
When solenoid valve is ordered as cartridge only, nut is included.

For valve dimensions with manual override option installed see page 83

WARNING

Maintain 5-8 Nm (4-6 lbf ft) maximum torque on valve tube nut. Overtightening may cause valve failure.

SV4-10-O/OM/OR

2-way, spool type, normally open solenoid valve

Functional symbol

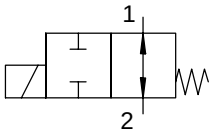

Sectional view

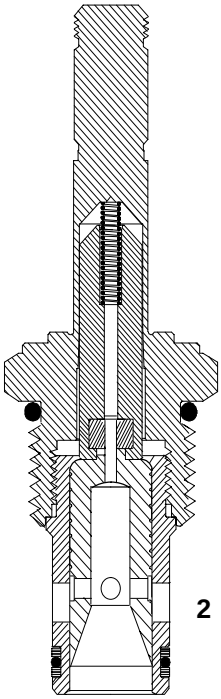

Description

The SV4-10-O is a 2-way, 2-position, spool type, direct acting, normally open, screw-in cartridge solenoid valve.

Operation

In the de-energized position, this valve allows bi-directional flow between port 1 and port 2. In the energized position both ports are closed.

Ratings and specifications

Performance data is typical with fluid at 21,8 cSt (105 SUS) and 49°C (120°F)

Typical application pressure (all ports) . . . . . 210 bar (3000 psi)

Cartridge fatigue pressure (infinite life) . . . . . 210 bar (3000 psi)

Rated flow . . . . . 23 l/min (6 USgpm)

Internal leakage port.2 to port 1 . . . 82 cm^3/min (5 in^3 / min.) max. @ 210 bar (3000 psi)

Temperature range . . . . . –40 to 120°C (–40° to 248°F)

Coil duty . . . . . Continuous from 85% to 110% nominal voltage

Cavity . . . . . C-10-2 (See page 74)

Fluids . . . . . All general purpose hydraulic fluids such as: MIL-H-5606, SAE 10, SAE 20, etc.

Filtration . . . . . Cleanliness code 18**/16/13**

Standard housing material . . . . . Aluminum

Weight including cartridge . . . . . 0,4 kg (0.87 lb.)

Seal kit . . . . . 565806 Buna-N
889627 Viton®

Viton is a registered trademark of E.I. DuPont Co.

Pressure Drop Curve

Cartridge only

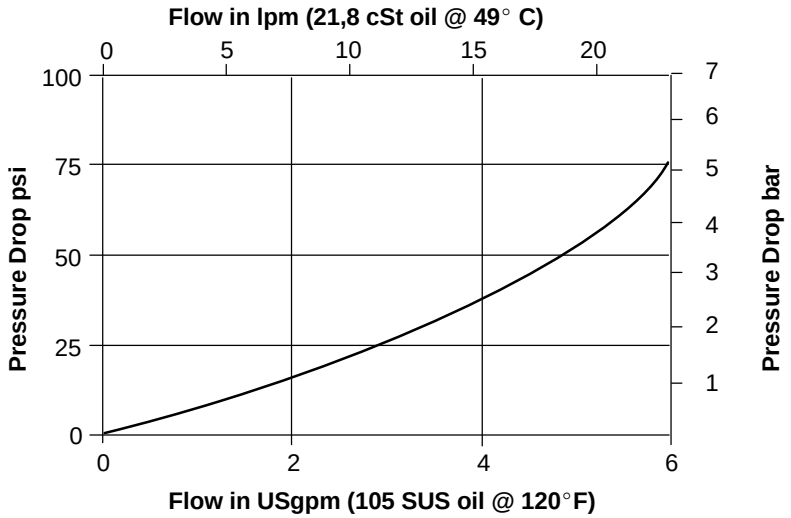

Port 2 to port 1
and port 1 to port 2 de-energized

SV4 - 10 (V) -O (*) -* * -** ***

1 2 3 4 5 6 7 8

1 **Function**

SV4 – Solenoid valve

2 **Size**

10 - 10 Size

3 **Seals**

Blank- Buna-N
V - Viton

4 **Style**

O - Normally open

5 **Manual override option**

Blank - No manual override
M - Knob type
R - Cable type

6 **Port size**

0 - Cartridge only

Code	Port size	Housing number
3B	3/8” BSPP	02-175462
6T	SAE 6	566151
2G	1/4 ” BSPP	876702
3G	3/8” BSPP	876703
6H	SAE 6	876700
8H	SAE 8	876701

See pages 76 & 77 for housings

7 **Voltage rating**

00 - No coil
12D - 12VDC
24D - 24VDC
36D - 36VDC
24A - 24VAC
120A- 120VAC
240A- 240VAC
12B - 12VDC/w diode*
24B - 24VDC/w diode*

*optional arc suppression diode

8 **Connector types**

Blank - No coil

Voltage	**G** - ISO 4400 DIN 43650	**P** - 1/2” NPT conduit port w/ leadwire	**Q** - Spade terminals	**W** - Leadwire	**N** - Deutsch (DC only)	**Y** - Amp JR (DC only)
12D	02–178086	02-178078	02-178070	02-178063	02-178093	02-178711
24D	02–178087	02-178079	02-178073	02-178065	02-178094	02-178712
36D	02–178089	02-178080	02-178075	02-178066	02-178095	02-178713
24A	02–178112	02-178104	02-178103	02-178102	–	–
120A	02–178114	02-178106	–	–		
240A	02–178117	02-178109				
12B	02–178840	–	02-178834	02-178832	02-178842	02-178762
24B	02–178841		02-178835	02-178833	02-178843	02-178846

Dimensions

mm (inch)

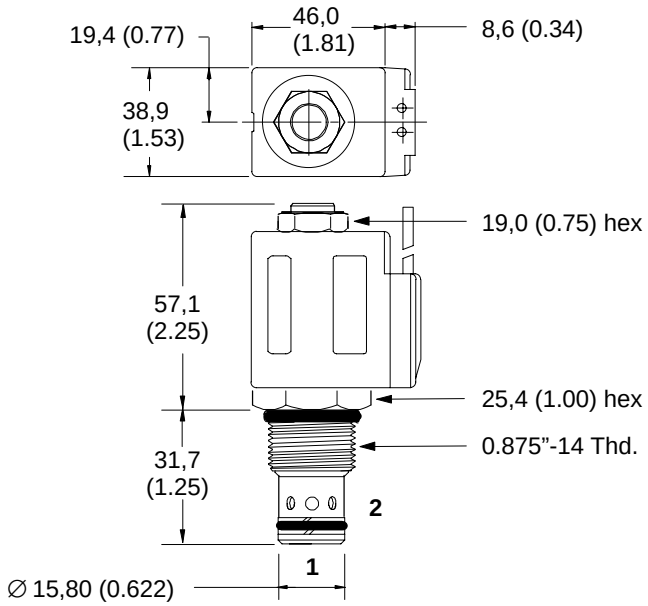

Torque cartridge in housing 47-54 Nm (35-40 lbf ft)

Valve is shown with “W” coil. See other coils on page 81.

Note
When solenoid valve is ordered as cartridge only, nut is included.

For valve dimensions with manual override option installed see page 83

WARNING

Maintain 5-8 Nm (4-6 lbf ft) maximum torque on valve tube nut. Overtightening may cause valve failure.

SV1-8-3/3M

3-way, 2-position, spool type solenoid valve

Functional symbol

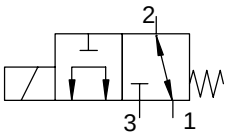

Sectional view

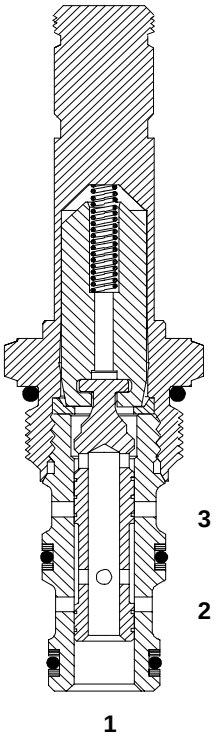

Description

The SV1-8-3 is a 3-way, 2-position, direct acting, spool type solenoid valve. This valve can be used in applications requiring separate and tank lines, such as a single acting cylinder, or any other application where a three-way, two-position solenoid valve is needed.

Operation

In the de-energized position, the SV1-8-3 allows flow from port 2 to port 1, while port 3 is blocked. In the energized position, flow is allowed from port 1 to port 3, while port 2 is blocked.

Ratings and specifications

Performance data is typical with fluid at 21,8 cSt (105 SUS) and 49°C (120°F)

Typical application pressure (all ports)	210 bar (3000 psi)
Cartridge fatigue pressure	210 bar (3000 psi)
Rated flow	11 l/min (3 USgpm)
Internal leakage (per land)	82 cm^3/min. (5 in^3/min.) maximum @ 210 bar (3000 psi)
Temperature range	–40 to 120°C (–40° to 248°F)
Coil duty	Continuous for 85% to 110% of nominal voltage
Cavity	C-8-3 (See page 75)
Fluids	All general purpose hydraulic fluids such as: MIL-H-5606, SAE 10, SAE 20, etc.
Filtration	Cleanliness code 18/**16/13**
Standard housing material	Aluminum
Weight including coil	0,30 kg (0.66 lbs.)
Seal kit	02-160755 Buna-N 02-160756 Viton®

Viton is a registered trademark of E.I. DuPont Co.

Pressure Drop Curve

Cartridge only

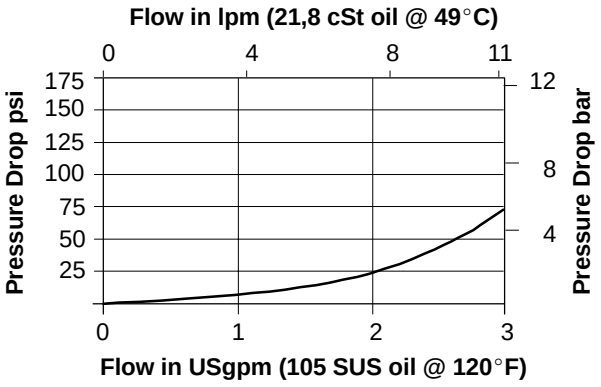

Operating Limits

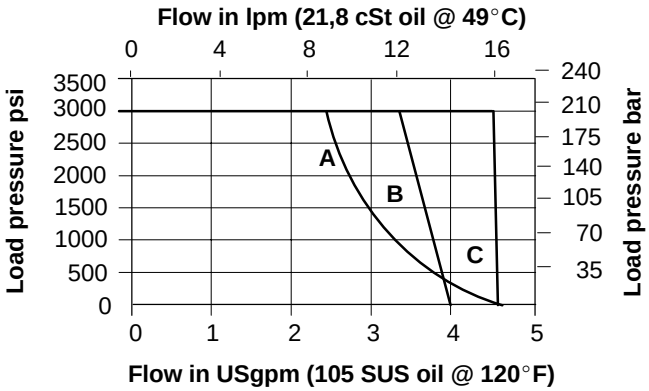

A -Selector 1 to 3
B -Normally open
C -Normally closed & Selector 1 to 2

SV1 - 8 (V) - 3 (M) - (A) - ** - ** * S**

1 2 3 4 5 6 7 8 9 10

1 **Function**

SV1 – Solenoid valve

2 **Size**

8 - 8 Size

3 **Seals**

Blank - Buna-N
V - Viton

4 **Style**

3 - 3-way

5 **Manual override option**

Blank - No manual override
M - Knob type

6 **Valve housing material**
Omit for cartridge only

A - Aluminum

7 **Port size**

0 - Cartridge only

Code	Port size	Housing number
2G	1/4" BSPP	02-160739
3G	3/8" BSPP	02-160740
4T	SAE 4	02-160741
6T	SAE 6	02-160742

See page 79 for housings

9 **Connector types**

Blank - No coil

Voltage	**G** - ISO 4400 DIN 43650	**P** - 1/2" NPT conduit port w/ leadwire	**Q** - Spade terminals	**W** - Leadwire	**N** - Deutsch (DC only)	**Y** - Amp JR (DC only)
12D	02-160690	02-160684	02-160681	02-160678	02-160958	02-178001
24D	02-160691	02-160685	02-160682	02-160679	02-160959	02-178002
36D	02-160692	02-160686	02-160683	02-160680	02-160960	02-178003
24A	02-160702	02-160699	02-160696	02-160693	–	–
120A	02-160703	02-160700	–	–		
240A	02-160704	02-160701				
12B	02-178810	–	02-178804	02-178802	02-160953	02-160957
24B	02-178811		02-178805	02-178803	02-178812	02-178815

10 **Series coil**

S - 8-series coil

8 **Voltage rating**

00 - No coil
12D - 12VDC
24D - 24VDC
36D - 36VDC
24A - 24VAC
120A - 120VAC
240A - 240VAC
12B - 12VDC/w diode*
24B - 24VDC/w diode*

*optional arc suppression diode

Dimensions
mm (inch)

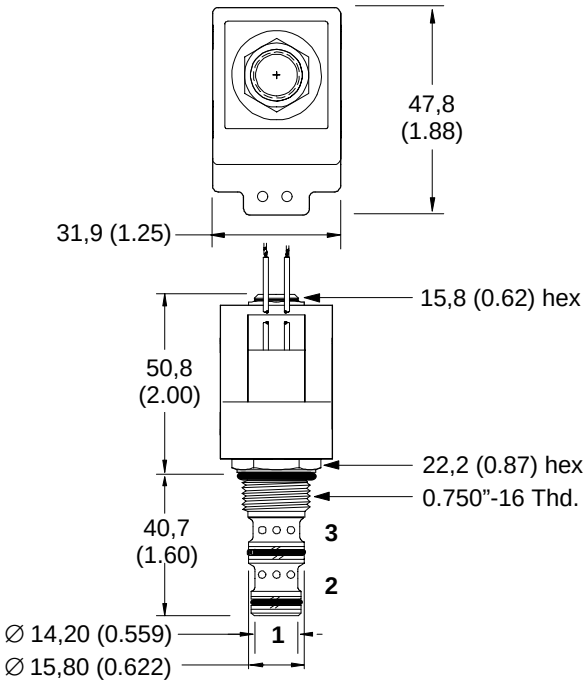

Torque cartridge in housing 34-41 Nm (25-30 lbf ft)

Valve is shown with "W" coil. See other coils on page 80.

Note
When solenoid valve is ordered as cartridge only, nut is included.

For valve dimensions with manual override option installed see page 83

WARNING

Maintain 5-8 Nm (4-6 lbf ft) maximum torque on valve tube nut. Overtightening may cause valve failure.

SV4-8-3/3M

3-way, 2-position, spool type solenoid valve

Functional symbol

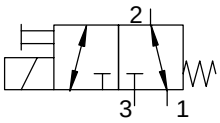

Sectional view

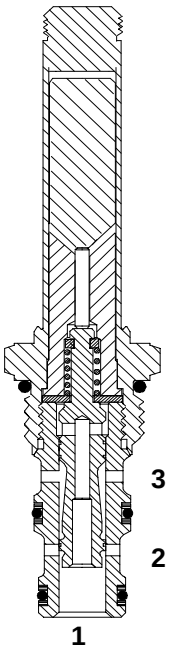

Description

The SV4-8-3 is a 3-way, 2-position, direct acting, spool type solenoid valve.

Operation

In the de-energized position, the SV4-8-3 allows flow from port 2 to port 1, while port 3 is blocked. In the energized position, flow is allowed from port 2 to port 3, while blocking port 1. Pressure on Port 1 should not exceed 20 bar (300 psi).

Ratings and specifications

Performance data is typical with fluid at 21,8 cSt (105 SUS) and 49°C (120°F)

Typical application pressure (all ports) . . . . . 210 bar (3000 psi)

Cartridge fatigue pressure (infinite life) . . . . . 210 bar (3000 psi)

Rated flow . . . . . 13 l/min (4 USgpm)

Internal leakage . . . . . 82 cm^3/min. (5 in^3/min.) maximum @ 210 bar (3000 psi)

Temperature range . . . . . –40 to 120°C (–40° to 248°F)

Coil duty . . . . . Continuous from 85% to 110% of nominal voltage

Response times (100% rated voltage and 100% rated flow) . . . . . Energize: 22 ms
De-energize: 27 ms

Cavity . . . . . C-8-3 (See page 75)

Fluids . . . . . All general purpose hydraulic fluids such as: MIL-H-5606, SAE 10, SAE 20, etc.

Filtration . . . . . Cleanliness code 18/**16/13**

Standard housing material . . . . . Aluminum

Weight including coil . . . . . 0,29 kg (0.64 lb.)

Seal kit . . . . . 02-160755 Buna-N
02-160756 Viton®

Viton is a registered trademark of E.I. DuPont Co.

Pressure Drop Curve

Cartridge only

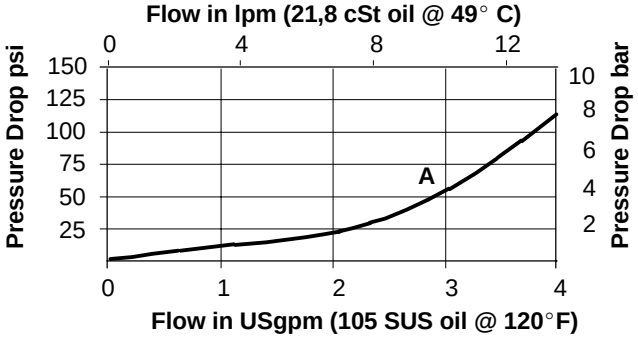

A -Port 2 to port 1 and port 2 to port 3

Operating Limits

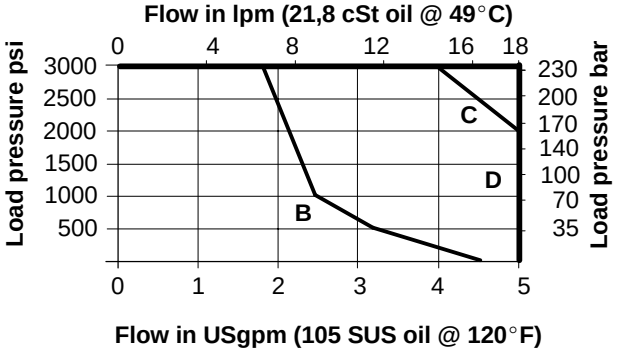

B -Normally open port 1 to port 2
C -Normally closed port 3 to port 1
D -Selector 2 to1 and 2 to 3

SV4 - 8 (V) - 3 (M) - (A) **- ** * S**

1 2 3 4 5 6 7 8 9 10

1 Function

SV4 – Solenoid valve

2 Size

8 - 8 Size

3 Seals

Blank- Buna-N
V - Viton

4 Style

3 - 3-way

5 Manual override option

Blank-No manual override
M - Knob type

6 Valve housing material
Omit for cartridge only

A - Aluminum

7 Port size

0 - Cartridge only

Code	Port size	Housing number
2G	1/4" BSPP	02-160739
3G	3/8" BSPP	02-160740
4T	SAE 4	02-160741
6T	SAE 6	02-160742

See page 79 for housings

8 Voltage rating

00 - No coil
12D - 12VDC
24D - 24VDC
36D - 36VDC
24A - 24VAC
120A- 120VAC
240A- 240VAC
12B - 12VDC/w diode*
24B - 24VDC/w diode*

*optional arc suppression diode

9 Connector types

Blank - No coil

Voltage	**G** - ISO 4400 DIN 43650	**P** - 1/2" NPT conduit port w/ leadwire	**Q** - Spade terminals	**W** - Leadwire	**N** - Deutsch (DC only)	**Y** - Amp JR (DC only)
12D	02-160690	02-160684	02-160681	02-160678	02-160958	02-178001
24D	02-160691	02-160685	02-160682	02-160679	02-160959	02-178002
36D	02-160692	02-160686	02-160683	02-160680	02-160960	02-178003
24A	02-160702	02-160699	02-160696	02-160693	–	–
120A	02-160703	02-160700	–	–		
240A	02-160704	02-160701				
12B	02-178810	–	02-178804	02-178802	02-160953	02-160957
24B	02-178811		02-178805	02-178803	02-178812	02-178815

10 Series coil

S - 8-series coil

Dimensions
mm (inch)

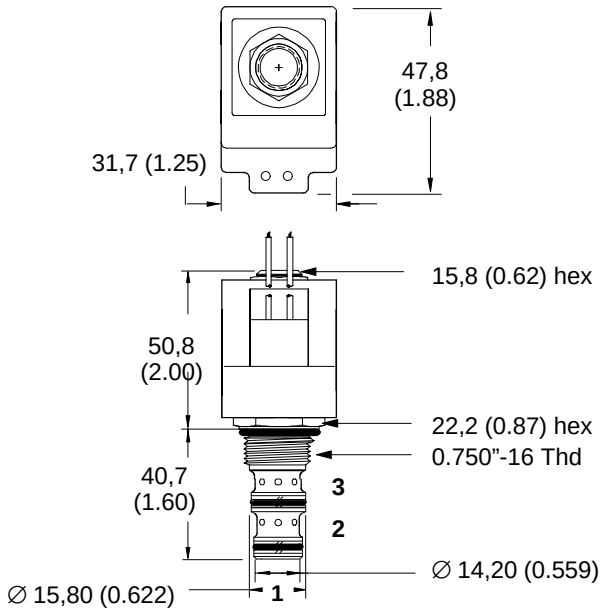

Torque cartridge in housing 34-41 Nm (25-30 lbf ft)

Valve is shown with "W" coil. See other coils on page 80.

Note
When solenoid valve is ordered as cartridge only, nut is included.

For valve dimensions with manual override option installed see page 83

WARNING

Maintain 5-8 Nm (4-6 lbf ft) maximum torque on valve tube nut. Overtightening may cause valve failure.

SV1-10-3/3M/3R
3-way, 2-position, spool type solenoid valve

Functional symbol

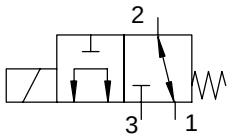

Sectional view

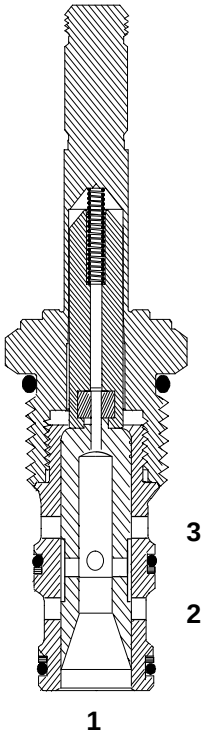

Description

The SV1-10-3 is a 3-way, 2-position, direct acting, spool type screw-in cartridge solenoid valve.

Operation

In the de-energized position, this valve allows flow from port 2 to port 1 while port 3 is blocked. In the energized position, flow is allowed from port 1 to port 3 while port 2 is blocked.

Ratings and specifications

Performance data is typical with fluid at 21,8 cSt (105 SUS) and 49°C (120°F)

Typical application pressure (all ports) . . . . . 210 bar (3000 psi)

Cartridge fatigue pressure (infinite life) . . . . . 210 bar (3000 psi)

Rated flow . . . . . 23 l/min (6 USgpm)

Internal leakage . . . . . 164 cm^3/min. (10 in^3/min) maximum @ 210 bar (3000 psi)

Temperature range . . . . . –40 to 120°C (–40° to 248°F)

Coil duty . . . . . Continuous from 85% to 110% nominal voltage

Cavity . . . . . C-10-3 (See page 75)

Fluids . . . . . All general purpose hydraulic fluids such as: MIL-H-5606, SAE 10, SAE 20, etc.

Filtration . . . . . Cleanliness code 18**/16/13**

Standard housing material . . . . . Aluminum

Weight including coil . . . . . 0,42 kg (0.93 lb.)

Seal kit . . . . . 565804 Buna-N
889599 Viton®

Viton is a registered trademark of E.I. DuPont Co.

Pressure Drop Curves
Cartridge only

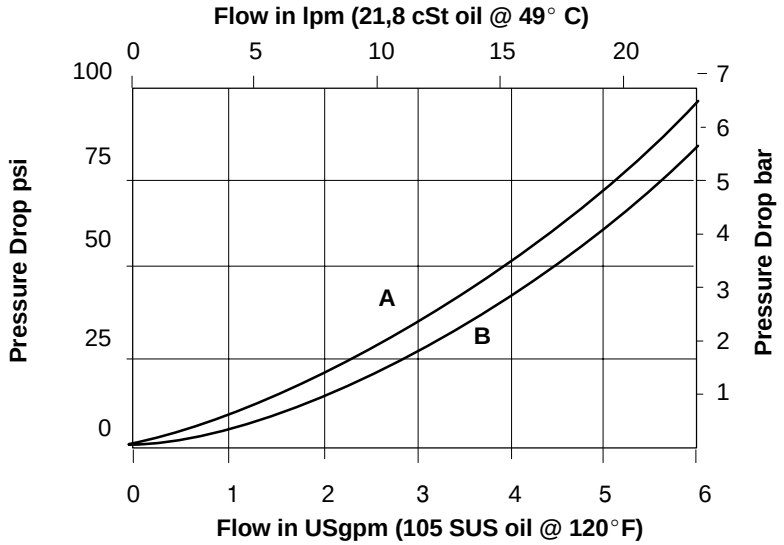

A -Port 3 to port 1 energized

B -Port 1 to port 2 de-energized

SV1 - 10 (V) - 3 (*) - ** - ** ***

1 2 3 4 5 6 7 8

1 Function

SV1 – Solenoid valve

2 Size

10 - 10 Size

3 Seals

Blank- Buna-N
V - Viton

4 Style

3 - 3-way

5 Manual override option

Blank - No manual override
M - Knob type
R - Cable type

6 Port size

0 - Cartridge only

Code	Port size	Housing number
3B	3/8" BSPP	02-173358
6T	SAE 6	566162
2G	1/4 " BSPP	876705
3G	3/8" BSPP	876714
6H	SAE 6	876704
8H	SAE 8	876711

See pages 78 & 79 for housings

7 Voltage rating

00 - No coil
12D - 12VDC
24D - 24VDC
36D - 36VDC
24A - 24VAC
120A- 120VAC
240A- 240VAC
12B - 12VDC/w diode*
24B - 24VDC/w diode*

*optional arc suppression diode

8 Connector types

Blank - No coil

Voltage	**G** - ISO 4400 DIN 43650	**P** - 1/2" NPT conduit port w/ leadwire	**Q** - Spade terminals	**W** - Leadwire	**N** - Deutsch (DC only)	**Y** - Amp JR (DC only)
12D	02–178086	02-178078	02-178070	02-178063	02-178093	02-178711
24D	02–178087	02-178079	02-178073	02-178065	02-178094	02-178712
36D	02–178089	02-178080	02-178075	02-178066	02-178095	02-178713
24A	02–178112	02-178104	02-178103	02-178102	–	–
120A	02–178114	02-178106	–	–		
240A	02–178117	02-178109				
12B	02–178840	–	02-178834	02-178832	02-178842	02-178762
24B	02–178841		02-178835	02-178833	02-178843	02-178846

Dimensions

mm (inch)

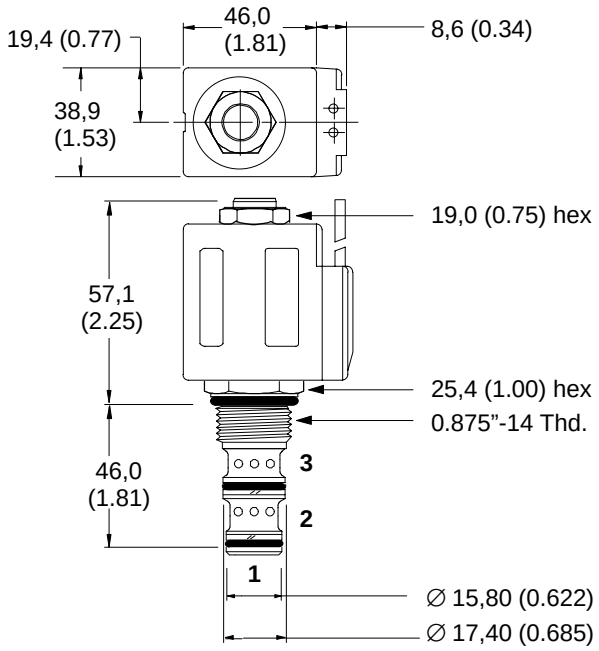

Torque cartridge in housing 47-54 Nm (35-40 lbf ft)

Valve is shown with "W" coil. See other coils on page 81.

Note
When solenoid valve is ordered as cartridge only, nut is included.

For valve dimensions with manual override option installed see page 83

WARNING

Maintain 5-8 Nm (4-6 lbf ft) maximum torque on valve tube nut. Overtightening may cause valve failure.

SV4-10-3/3P/3S

3-way, 2-position, spool type solenoid valve

Functional symbol

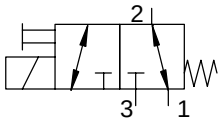

Sectional view

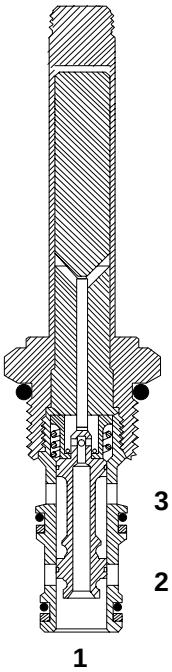

Description

The SV4-10-3 is a 3-way, 2-position, direct acting, spool type, screw-in cartridge solenoid valve.

Operation

In the de-energized position, this valve allows flow from port 2 to port 1 while port 3 is blocked. In the energized position, flow is allowed from port 2 to port 3 while port 1 is blocked.

Ratings and specifications

Performance data is typical with fluid at 21,8 cSt (105 SUS) and 49°C (120°F)

Typical application pressure (all ports)	210 bar (3000 psi)
Cartridge fatigue pressure (infinite life)	210 bar (3000 psi)
Rated flow	23 l/min (6 USgpm)
Internal leakage	164 cm^3/min. (10 in^3/min) maximum @ 210 bar (3000 psi)
Temperature range	–40 to 120°C (–40° to 248°F)
Coil duty	Continuous from 85% to 110% nominal voltage
Cavity	C-10-3 (See page 75)
Fluids	All general purpose hydraulic fluids such as: MIL-H-5606, SAE 10, SAE 20, etc.
Filtration	Cleanliness code 18**/16/13**
Standard housing material	Aluminum
Weight including coil	0,42 kg (0.93 lb.)
Seal kit	565804 Buna-N 889599 (Viton®)

Viton is a registered trademark of E.I. DuPont Co.

Pressure Drop Curves

Cartridge only

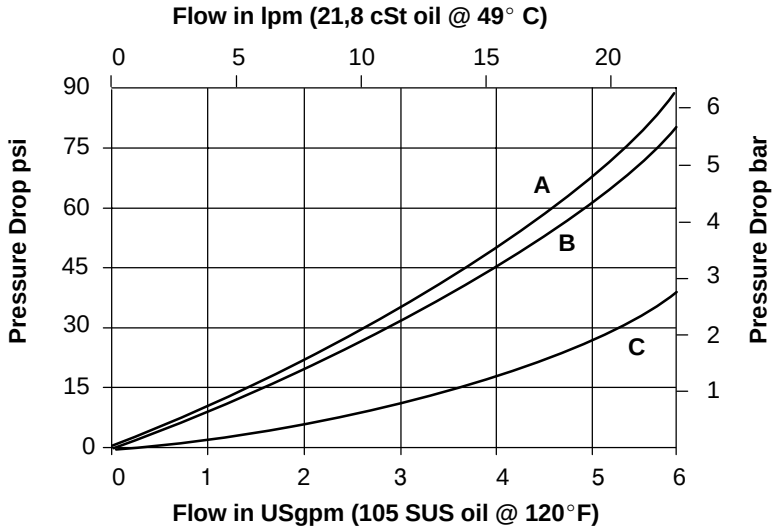

A -Port 3 to port 2 energized
B -Port 1 to port 2 de-energized
C -Port 2 to port 1 de-energized

SV4 - 10 (V) - 3 (*) * * - ** ***

1 2 3 4 5 6 7 8

1 Function

SV4 – Solenoid valve

2 Size

10 - 10 Size

3 Seals

Blank- Buna-N
V - Viton

4 Style

3 - 3-way

5 Manual override option

Blank - No manual override
P - Push type
S - Screw type

6 Port size

0 - Cartridge only

Code	Port size	Housing number
3B	3/8" BSPP	02-173358
6T	SAE 6	566162
2G	1/4 " BSPP	876705
3G	3/8" BSPP	876714
6H	SAE 6	876704
8H	SAE 8	876711

See pages 78 & 79 for housings

7 Voltage rating

00 - No coil
12D - 12VDC
24D - 24VDC
36D - 36VDC
24A - 24VAC
120A- 120VAC
240A- 240VAC
12B - 12VDC/w diode*
24B - 24VDC/w diode*

*optional arc suppression diode

8 Connector types

Blank - No coil

Voltage	**G** - ISO 4400 DIN 43650	**P** - 1/2" NPT conduit port w/ leadwire	**Q** - Spade terminals	**W** - Leadwire	**N** - Deutsch (DC only)	**Y** - Amp JR (DC only)
12D	02–178086	02-178078	02-178070	02-178063	02-178093	02-178711
24D	02–178087	02-178079	02-178073	02-178065	02-178094	02-178712
36D	02–178089	02-178080	02-178075	02-178066	02-178095	02-178713
24A	02–178112	02-178104	02-178103	02-178102	–	–
120A	02–178114	02-178106	–	–		
240A	02–178117	02-178109				
12B	02–178840	–	02-178834	02-178832	02-178842	02-178762
24B	02–178841		02-178835	02-178833	02-178843	02-178846

Dimensions

mm (inch)

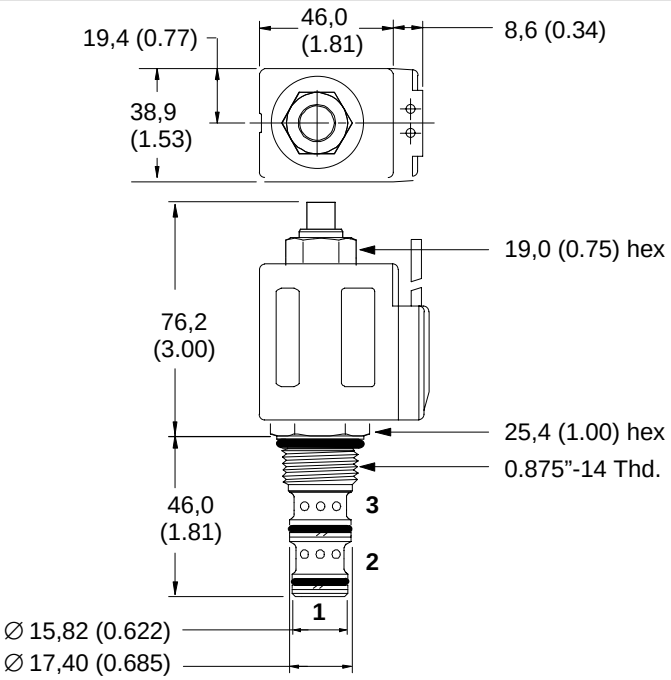

Torque cartridge in housing 47-54 Nm (35-40 lbf ft)

Valve is shown with "W" coil. See other coils on page 81.

Note
When solenoid valve is ordered as cartridge only, nut is included.

For valve dimensions with manual override option installed see page 83

WARNING

Maintain 5-8 Nm (4-6 lbf ft) maximum torque on valve tube nut. Overtightening may cause valve failure.

SV1-8-4/4M

4-way, 2-position, spool type solenoid valve

Functional symbol

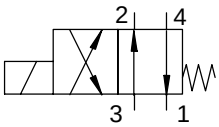

Sectional view

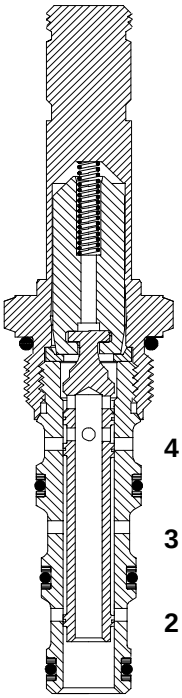

Description

The SV1-8-4 is a 4-way, 2-position, direct acting, spool type solenoid valve.

Operation

In the de-energized position, the SV1-8-4 allows flow from port 4 to port 1, and from port 3 to port 2. In the energized position, flow is allowed from port 3 to port 4, and from port 2 to port 1.

Ratings and specifications

Performance data is typical with fluid at 21,8 cSt (105 SUS) and 49°C (120°F)

Typical application pressure (all ports)	210 bar (3000 psi)
Cartridge fatigue pressure (infinite life)	210 bar (3000 psi)
Rated flow	11 l/min (3 USgpm)
Internal leakage (per land)	82 cm^3/min. (5 in^3/min.) maximum @ 210 bar (3000 psi)
Temperature range	–40 to 120°C (–40° to 248°F)
Coil duty	Continuous from 85% to 110% of nominal voltage
Cavity	C-8-4 (See page 75)
Fluids	All general purpose hydraulic fluids such as: MIL-H-5606, SAE 10, SAE 20, etc.
Filtration	Cleanliness code 18/**16/13**
Standard housing material	Aluminum
Weight including coil	0,31 kg (0.69 lb.)
Seal kit	02-160757 Buna-N 02-160758 Viton®

Viton is a registered trademark of E.I. DuPont Co.

Pressure Drop Curves

Cartridge only

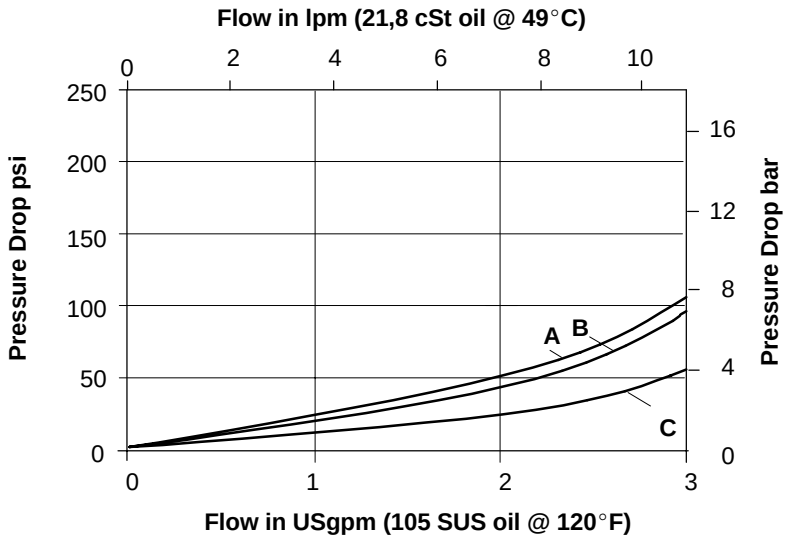

A -Port 3 to port 4 or port 3 to port 2

B -Port 4 to 1

C -Port 2 to 1

SV1 - 8 (V) - 4 (M) - (A) - ** ** * S**

1 2 3 4 5 6 7 8 9 10

1 Function

SV1 – Solenoid valve

2 Size

8 - 8 Size

3 Seals

Blank- Buna-N
V - Viton

4 Style

4 - 4-way

5 Manual override option

Blank - No manual override
M - Manual override

6 Valve housing material

Omit for cartridge only

A - Aluminum

7 Port size

0 - Cartridge only

Code	Port size	Housing number
2G	1/4” BSPP	02-160747
3G	3/8” BSPP	02-160748
4T	SAE 4	02-160749
6T	SAE 6	02-160750

See page 79 for housings

8 Voltage rating

00 - No coil
12D - 12VDC
24D - 24VDC
36D - 36VDC
24A - 24VAC
120A- 120VAC
240A- 240VAC
12B - 12VDC/w diode*
24B - 24VDC/w diode*

*optional arc suppression diode

9 Connector types

Blank - No coil

Voltage	**G** - ISO 4400 DIN 43650	**P** - 1/2” NPT conduit port w/ leadwire	**Q** - Spade terminals	**W** - Leadwire	**N** - Deutsch (DC only)	**Y** - Amp JR (DC only)
12D	02-160690	02-160684	02-160681	02-160678	02-160958	02-178001
24D	02-160691	02-160685	02-160682	02-160679	02-160959	02-178002
36D	02-160692	02-160686	02-160683	02-160680	02-160960	02-178003
24A	02-160702	02-160699	02-160696	02-160693	–	–
120A	02-160703	02-160700	–	–		
240A	02-160704	02-160701				
12B	02-178810	–	02-178804	02-178802	02-160953	02-160957
24B	02-178811		02-178805	02-178803	02-178812	02-178815

10 Series coil

S - 8-series coil

Dimensions

mm (inch)

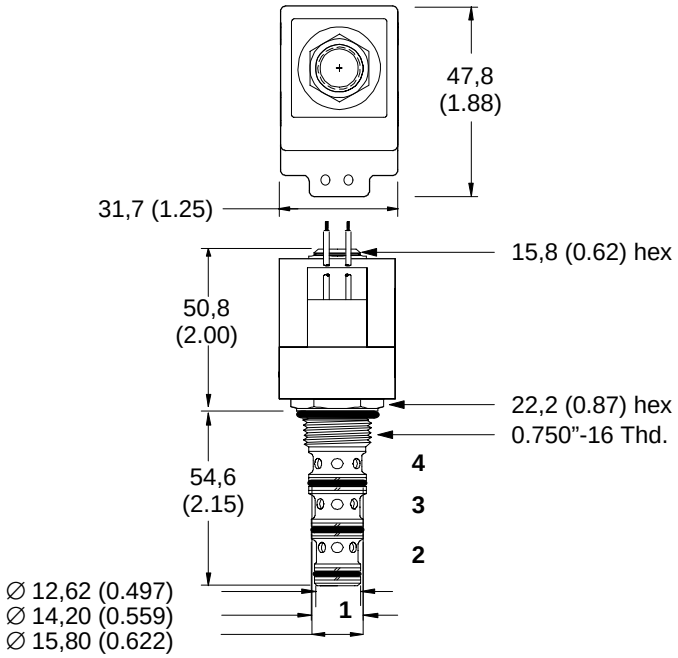

Torque cartridge in housing 34-41 Nm (25-30 lbf ft)

Valve is shown with “W” coil. See other coils on page 80.

Note
When solenoid valve is ordered as cartridge only, nut is included.

For valve dimensions with manual override option installed see page 83

WARNING

Maintain 5-8 Nm (4-6 lbf ft) maximum torque on valve tube nut. Overtightening may cause valve failure.

SV2-8-4/4M

4-way, 2-position, spool type solenoid valve

Functional symbol

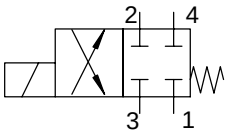

Sectional view

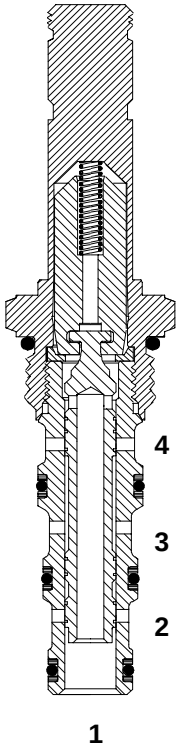

Description

The SV2-8-4 is a four-way, two-position, direct acting, spool-type solenoid valve.

Operation

The SV2-8-4 has all ports blocked in the de-energized position. In the energized position, flow is allowed from port 2 to port 1, and from port 3 to port 4.

Ratings and specifications

Performance data is typical with fluid at 21,8 cSt (105 SUS) and 49°C (120°F)

Typical application pressure (all ports) . . . . . 210 bar (3000 psi)

Cartridge fatigue pressure (infinite life) . . . . . 210 bar (3000 psi)

Rated flow . . . . . 13 l/min (4 USgpm)

Internal leakage (per land) . . . 82 cm^3/min. (5 in^3/min.) maximum @ 210 bar (3000 psi)

Temperature range . . . . . –40 to 120°C (–40° to 248°F)

Coil duty . . . . . Continuous from 85% to 110% of nominal voltage

Response times(100% rated voltage and 100% rated flow) . . . . . Energize: 21 ms
De-energize: 42 ms

Cavity . . . . . C-8-4 (See page 75)

Fluids . . . . . All general purpose hydraulic fluids such as:
MIL-H-5606, SAE 10, SAE 20, etc.

Filtration . . . . . Cleanliness code 18/**16/13**

Standard housing material . . . . . Aluminum

Weight including coil . . . . . 0,30 kg (0.66 lb.)

Seal kit . . . . . 02-160757 Buna-N
02-160758 Viton®

Viton is a registered trademark of E.I. DuPont Co.

Pressure Drop Curves

Cartridge only

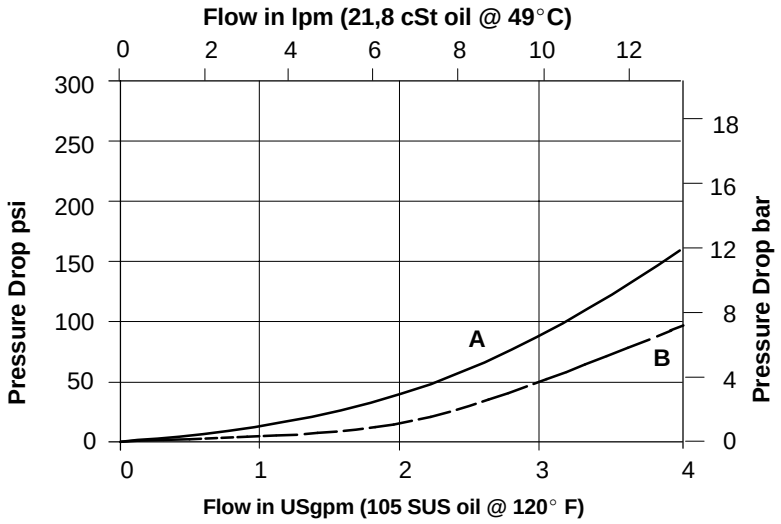

A -Port 3 to port 4
B -Port 2 to port 1

SV2- 8 (V) - 4 (M) - (A) - **-** * S**

1 2 3 4 5 6 7 8 9 10

1 Function

SV2 – Solenoid valve

2 Size

8 - 8 Size

3 Seals

Blank- Buna-N
V - Viton

4 Style

4 - 4-way

5 Manual override option

Blank - No manual override
M - Manual override

6 Valve housing material
Omit for cartridge only

A - Aluminum

7 Port size

0 - Cartridge only

Code	Port size	Housing number
2G	1/4” BSPP	02-160747
3G	3/8” BSPP	02-160748
4T	SAE 4	02-160749
6T	SAE 6	02-160750

See page 79 for housings

8 Voltage rating

00 - No coil
12D - 12VDC
24D - 24VDC
36D - 36VDC
24A - 24VAC
120A- 120VAC
240A- 240VAC
12B - 12VDC/w diode*
24B - 24VDC/w diode*

*optional arc suppression diode

9 Connector types

Blank - No coil

Voltage	**G** - ISO 4400 DIN 43650	**P** - 1/2” NPT conduit port w/ leadwire	**Q** - Spade terminals	**W** - Leadwire	**N** - Deutsch (DC only)	**Y** - Amp JR (DC only)
12D	02-160690	02-160684	02-160681	02-160678	02-160958	02-178001
24D	02-160691	02-160685	02-160682	02-160679	02-160959	02-178002
36D	02-160692	02-160686	02-160683	02-160680	02-160960	02-178003
24A	02-160702	02-160699	02-160696	02-160693	–	–
120A	02-160703	02-160700	–	–		
240A	02-160704	02-160701				
12B	02-178810	–	02-178804	02-178802	02-160953	02-160957
24B	02-178811		02-178805	02-178803	02-178812	02-178815

10 Series coil

S - 8-series coil

Dimensions

mm (inch)

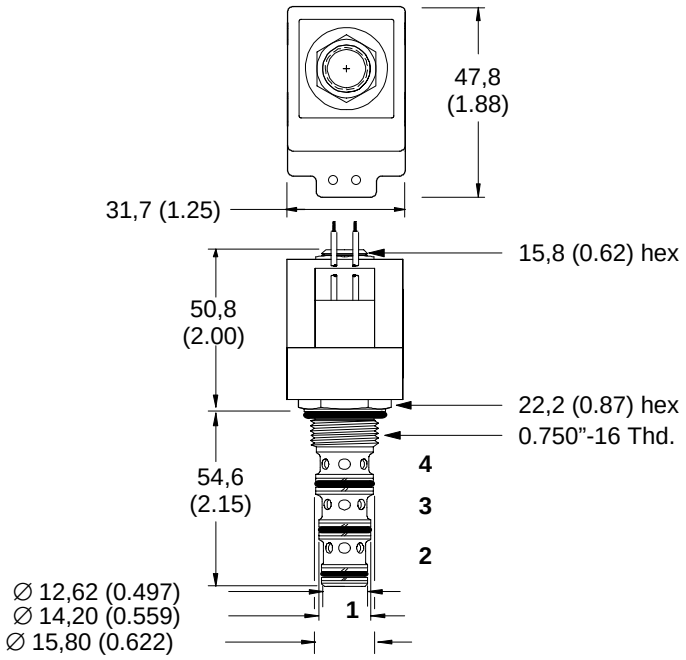

Torque cartridge in housing 34-41 Nm (25-30 lbf ft)

Valve is shown with “W” coil. See other coils on page 80.

Note
When solenoid valve is ordered as cartridge only, nut is included.
For valve dimensions with manual override option installed see page 83

WARNING

Maintain 5-8 Nm (4-6 lbf ft) maximum torque on valve tube nut. Overtightening may cause valve failure.

SV1-10-4/4M/4R
4-way, 2-position, spool type solenoid valve

Functional symbol

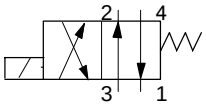

Sectional view

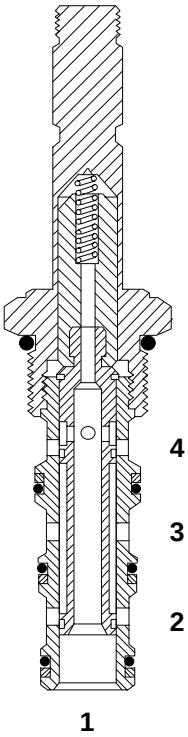

Description

The SV1-10-4 is a 4-way, 2-position, direct acting, spool type, screw-in cartridge solenoid valve.

Operation

In the de-energized position, this valve allows flow from port 2 to port 3 and from port 4 to port 1. In the energized position, flow is allowed from port 3 to port 4 and from port 4 to port 1.

Ratings and specifications

Performance data is typical with fluid at 21,8 cSt (105 SUS) and 49°C (120°F)

Typical application pressure (all ports) . . . . . 210 bar (3000 psi)

Cartridge fatigue pressure (infinite life) . . . . . 210 bar (3000 psi)

Rated flow . . . . . 23 l/min (6 USgpm)

Internal leakage . . . . . 164 cm^3/min. (10 in^3/min) maximum @ 210 bar (3000 psi)

Temperature range . . . . . –40 to 120°C (–40° to 248°F)

Coil duty . . . . . Continuous from 85% to 110% nominal voltage

Cavity . . . . . C-10-4 (See page 75)

Fluids . . . . . All general purpose hydraulic fluids such as: MIL-H-5606, SAE 10, SAE 20, etc.

Filtration . . . . . Cleanliness code 18**/16/13**

Standard housing material . . . . . Aluminum

Weight including coil . . . . . 0,44 kg (0.96 lb.)

Seal kit . . . . . 565805 Buna-N
889600 Viton®

Viton is a registered trademark of E.I. DuPont Co.

Pressure Drop Curves
Cartridge only

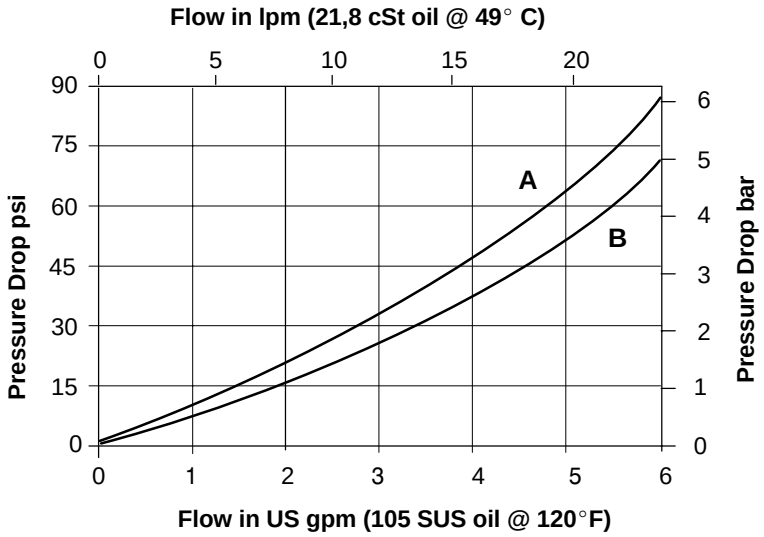

A -Port 4 to port 1

B -Port 3 to port 2

SV1 -10 (V) - 4 (*) - ** - ** ***

1 2 3 4 5 6 7 8

1 Function

SV1 – Solenoid valve

2 Size

10 - 10 Size

3 Seals

Blank- Buna-N
V - Viton

4 Style

4 - 4-way

5 Manual override option

Blank - No manual override
M - Knob type
R - Cable type

6 Port size

0 - Cartridge only

Code	Port size	Housing number
3B	3/8” BSPP	02-179705
6T	SAE 6	566161
2G	1/4 ” BSPP	876709
3G	3/8” BSPP	876715
6H	SAE 6	876708
8H	SAE 8	876713

See pages 78 & 79 for housings

7 Voltage rating

00 - No coil
12D - 12VDC
24D - 24VDC
36D - 36VDC
24A - 24VAC
120A- 120VAC
240A- 240VAC
12B - 12VDC/w diode*
24B - 24VDC/w diode*

*optional arc suppression diode

8 Connector types

Blank - No coil

Voltage	**G** - ISO 4400 DIN 43650	**P** - 1/2” NPT conduit port w/ leadwire	**Q** - Spade terminals	**W** - Leadwire	**N** - Deutsch (DC only)	**Y** - Amp JR (DC only)
12D	02–178086	02-178078	02-178070	02-178063	02-178093	02-178711
24D	02–178087	02-178079	02-178073	02-178065	02-178094	02-178712
36D	02–178089	02-178080	02-178075	02-178066	02-178095	02-178713
24A	02–178112	02-178104	02-178103	02-178102	–	–
120A	02–178114	02-178106	–	–		
240A	02–178117	02-178109				
12B	02–178840	–	02-178834	02-178832	02-178842	02-178762
24B	02–178841		02-178835	02-178833	02-178843	02-178846

Dimensions

mm (inch)

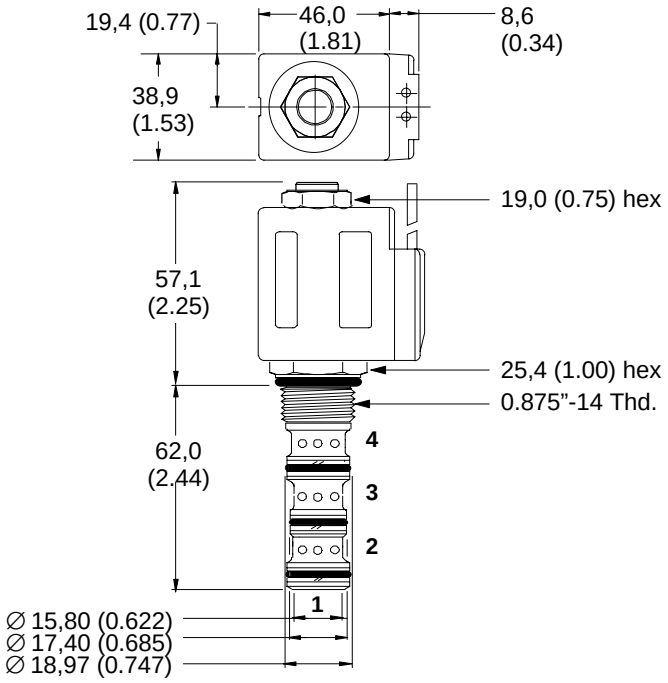

Torque cartridge in housing 47-54 Nm (35-40 lbf ft)

Valve is shown with “W” coil. See other coils on page 81.

Note
When solenoid valve is ordered as cartridge only, nut is included.

For valve dimensions with manual override option installed see page 83

WARNING

Maintain 5-8 Nm (4-6 lbf ft) maximum torque on valve tube nut.
Overtightening may cause valve failure.

SV2-10-4/4M/4R

4-way, 2-position, spool type solenoid valve

Functional symbol

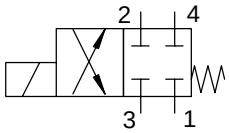

Sectional view

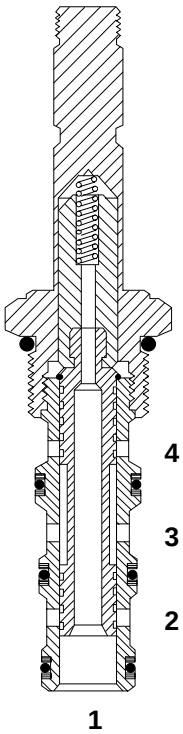

Description

The SV2-10-4 is a 4-way, 2-position, direct acting, spool type screw-in cartridge solenoid valve.

Operation

In the de-energized position, all ports are blocked. In the energized position, port 3 is open to port 4 and port 2 is open to port 1.

Ratings and specifications

Performance data is typical with fluid at 21,8 cSt (105 SUS) and 49°C (120°F)

Typical application pressure (all ports) . . . . . 210 bar (3000 psi)

Cartridge fatigue pressure (infinite life) . . . . . 210 bar (3000 psi)

Rated flow . . . . . 23 l/min (6 USgpm)

Internal leakage . . . . . 164 cm^3/min. (10 in^3/min) maximum @ 210 bar (3000 psi)

Temperature range . . . . . –40 to 120°C (–40° to 248°F)

Coil duty . . . . . Continuous from 85% to 110% nominal voltage

Cavity . . . . . C-10-4 (See page 75)

Fluids . . . . . All general purpose hydraulic fluids such as: MIL-H-5606, SAE 10, SAE 20, etc.

Filtration . . . . . Cleanliness code 18**/16/13**

Standard housing material . . . . . Aluminum

Weight including coil . . . . . 0,44 kg (0.96 lb.)

Seal kit . . . . . 565805 Buna-N
889600 Viton®

Viton is a registered trademark of E.I. DuPont Co.

Pressure Drop Curves

Cartridge only

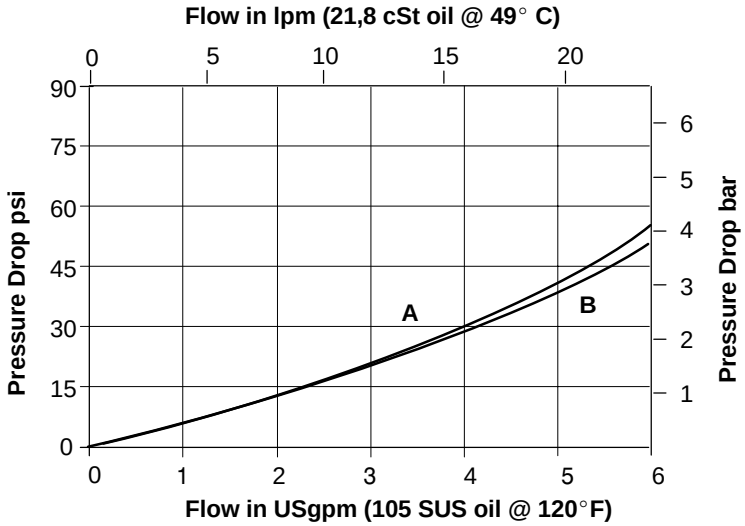

A -Port 3 to port 4
B-Port 1 to port 2

SV2 - 10 (V) - 4 (*) - * * - ** ***

1 2 3 4 5 6 7 8

1 Function

SV2 – Solenoid valve

2 Size

10 - 10 Size

3 Seals

Blank- Buna-N
V - Viton

4 Style

4 - 4-way

5 Manual override option

Blank - No manual override
M - Knob type
R - Cable type

6 Port size

0 - Cartridge only

Code	Port size	Housing number
3B	3/8” BSPP	02-179705
6T	SAE 6	566161
2G	1/4 ” BSPP	876709
3G	3/8” BSPP	876715
6H	SAE 6	876708
8H	SAE 8	876713

See pages 78 & 79 for housings

7 Voltage rating

00 - No coil
12D - 12VDC
24D - 24VDC
36D - 36VDC
24A - 24VAC
120A- 120VAC
240A- 240VAC
12B - 12VDC/w diode*
24B - 24VDC/w diode*

*optional arc suppression diode

8 Connector types

Blank - No coil

Voltage	**G** - ISO 4400 DIN 43650	**P** - 1/2” NPT conduit port w/ leadwire	**Q** - Spade terminals	**W** - Leadwire	**N** - Deutsch (DC only)	**Y** - Amp JR (DC only)
12D	02–178086	02-178078	02-178070	02-178063	02-178093	02-178711
24D	02–178087	02-178079	02-178073	02-178065	02-178094	02-178712
36D	02–178089	02-178080	02-178075	02-178066	02-178095	02-178713
24A	02–178112	02-178104	02-178103	02-178102	–	–
120A	02–178114	02-178106	–	–		
240A	02–178117	02-178109				
12B	02–178840	–	02-178834	02-178832	02-178842	02-178762
24B	02–178841		02-178835	02-178833	02-178843	02-178846

Dimensions
mm (inch)

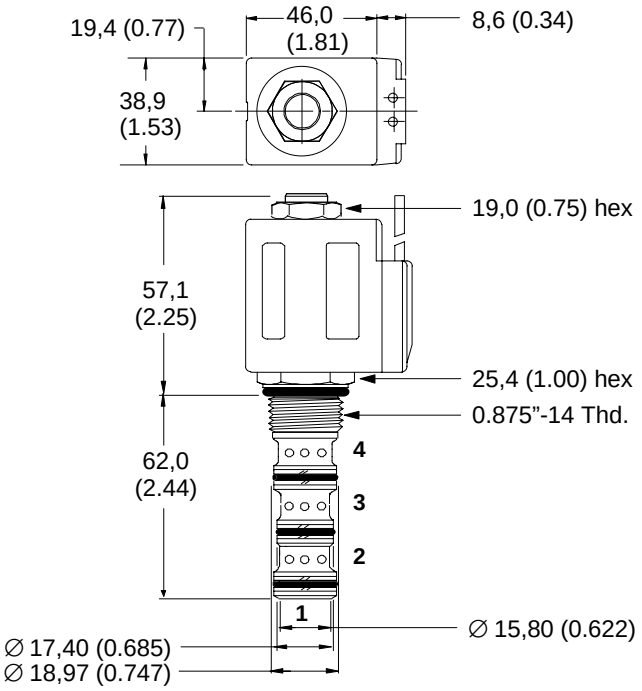

Torque cartridge in housing 47-54 Nm (35-40 lbf ft)

Valve is shown with “W” coil. See other coils on page 81.

Note
When solenoid valve is ordered as cartridge only, nut is included.

For valve dimensions with manual override option installed see page 83

WARNING

Maintain 5-8 Nm (4-6 lbf ft) maximum torque on valve tube nut. Overtightening may cause valve failure.

SV3-10-4/4M/4R

4-way, 2-position, spool type solenoid valve

Functional symbol

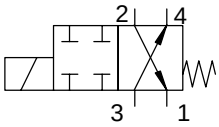

Sectional view

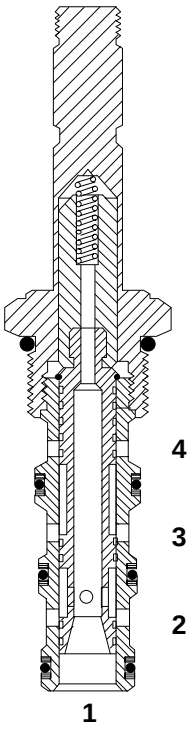

Description

The SV3-10-4 is a 4-way, 2-position, direct acting, spool type, screw-in cartridge solenoid valve.

Operation

In the de-energized position, port 3 is open to port 4 and port 2 is open to port 1. In the energized position all ports are blocked.

Ratings and specifications

Performance data is typical with fluid at 21,8 cSt (105 SUS) and 49°C (120°F)

Typical application pressure (all ports) . . . . . 210 bar (3000 psi)

Cartridge fatigue pressure (infinite life) . . . . . 210 bar (3000 psi)

Rated flow . . . . . 23 l/min (6 USgpm)

Internal leakage . . . . . 164 cm^3/min. (10 in^3/min) maximum @ 210 bar (3000 psi)

Temperature range . . . . . –40 to 120°C (–40° to 248°F)

Coil duty . . . . . Continuous from 85% to 110% nominal voltage

Cavity . . . . . C-10-4 (See page 75)

Fluids . . . . . All general purpose hydraulic fluids such as: MIL-H-5606, SAE 10, SAE 20, etc.

Filtration . . . . . Cleanliness code 18**/16/13**

Standard housing material . . . . . Aluminum

Weight including coil . . . . . 0,44 kg (0.96 lb.)

Seal kit . . . . . 565805 Buna-N
889600 Viton®

Viton is a registered trademark of E.I. DuPont Co.

Pressure Drop Curves

Cartridge only

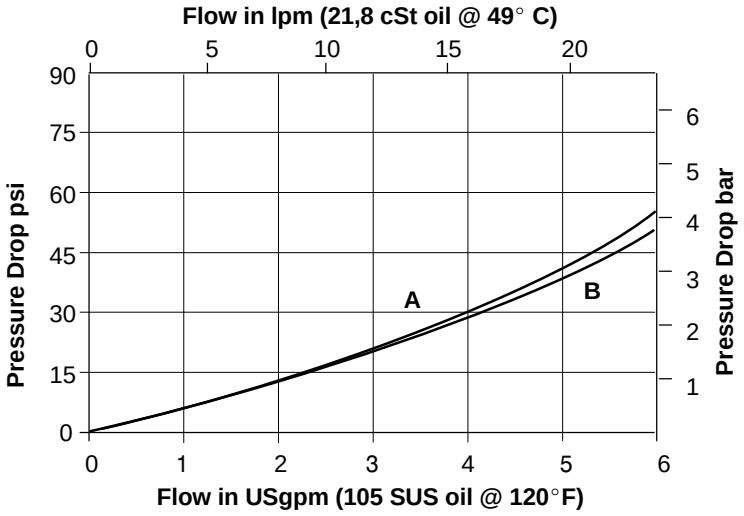

A-Port 3 to port 4

B-Port 1 to port 2

SV3 - 10 (V) - 4 (*) - * * - ** ***

1 2 3 4 5 6 7 8

1 Function

SV3 – Solenoid valve

2 Size

10 - 10 Size

3 Seals

Blank- Buna-N
V - Viton

4 Style

4 - 4-way

5 Manual override option

Blank - No manual override
M - Knob type
R - Cable type

6 Port size

0 - Cartridge only

Code	Port size	Housing number
3B	3/8” BSPP	02-179705
6T	SAE 6	566161
2G	1/4 ” BSPP	876709
3G	3/8” BSPP	876715
6H	SAE 6	876708
8H	SAE 8	876713

See pages 78 & 79 for housings

7 Voltage rating

00 - No coil
12D - 12VDC
24D - 24VDC
36D - 36VDC
24A - 24VAC
120A- 120VAC
240A- 240VAC
12B - 12VDC/w diode*
24B - 24VDC/w diode*

*optional arc suppression diode

8 Connector types

Blank - No coil

Voltage	**G** - ISO 4400 DIN 43650	**P** - 1/2” NPT conduit port w/ leadwire	**Q** - Spade terminals	**W** - Leadwire	**N** - Deutsch (DC only)	**Y** - Amp JR (DC only)
12D	02–178086	02-178078	02-178070	02-178063	02-178093	02-178711
24D	02–178087	02-178079	02-178073	02-178065	02-178094	02-178712
36D	02–178089	02-178080	02-178075	02-178066	02-178095	02-178713
24A	02–178112	02-178104	02-178103	02-178102	–	–
120A	02–178114	02-178106	–	–		
240A	02–178117	02-178109				
12B	02–178840	–	02-178834	02-178832	02-178842	02-178762
24B	02–178841		02-178835	02-178833	02-178843	02-178846

Dimensions
mm (inch)

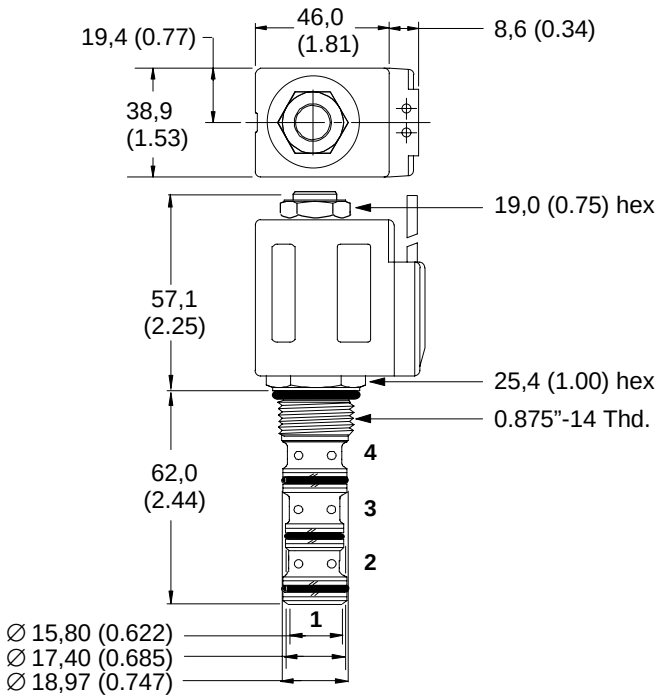

Torque cartridge in housing 47-54 Nm (35-40 lbf ft)

Valve is shown with “W” coil. See other coils on page 81.

Note
When solenoid valve is ordered as cartridge only, nut is included.

For valve dimensions with manual override option installed see page 83

WARNING

Maintain 5-8 Nm (4-6 lbf ft) maximum torque on valve tube nut. Overtightening may cause valve failure.

SV4-10-4/4M/4R

4-way, 2-position, spool type solenoid valve

Functional symbol

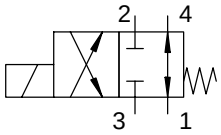

Sectional view

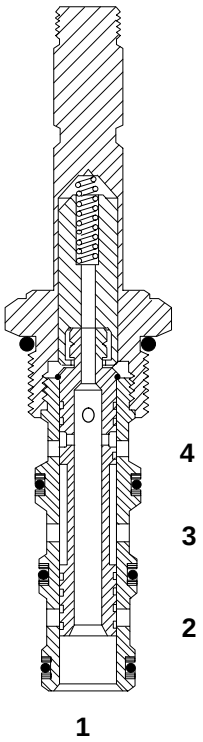

Description

The SV4-10-4 is a 4-way, 2-position, direct acting, spool type, screw-in cartridge solenoid valve.

Operation

In the de-energized position, flow is allowed between port 1 and port 4 while port 2 and port 3 are blocked. In the energized position port 3 is open to port 4 and port 2 is open to port 1.

Ratings and specifications

Performance data is typical with fluid at 21,8 cSt (105 SUS) and 49°C (120°F)

Typical application pressure (all ports) . . . . . 210 bar (3000 psi)

Cartridge fatigue pressure (infinite life) . . . . . 210 bar (3000 psi)

Rated flow . . . . . 23 l/min (6 USgpm)

Internal leakage . . . . . 164 cm^3/min. (10 in^3/min) maximum @ 210 bar (3000 psi)

Temperature range . . . . . –40 to 120°C (–40° to 248°F)

Coil duty . . . . . Continuous from 85% to 110% nominal voltage

Cavity . . . . . C-10-4 (See page 75)

Fluids . . . . . All general purpose hydraulic fluids such as: MIL-H-5606, SAE 10, SAE 20, etc.

Filtration . . . . . Cleanliness code 18**/16/13**

Standard housing material . . . . . Aluminum

Weight including coil . . . . . 0,44 kg (0.96 lb.)

Seal kit . . . . . 565805 Buna-N
889600 Viton®

Viton is a registered trademark of E.I. DuPont Co.

Pressure Drop Curves

Cartridge only

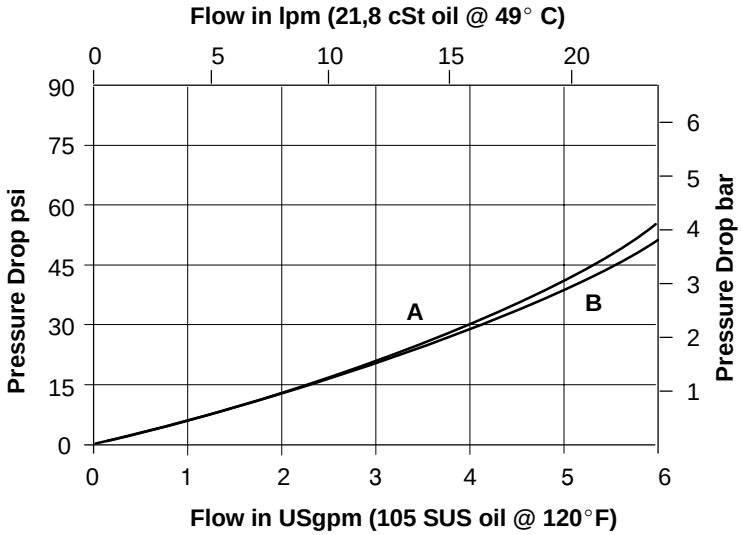

A -Port 3 to port 4

B-Port 1 to port 2

SV4 - 10 (V) - 4 (*) - * * - ** ***

1 2 3 4 5 6 7 8

1 Function

SV4 – Solenoid valve

2 Size

10 - 10 Size

3 Seals

Blank- Buna-N
V - Viton

4 Style

4 - 4-way

5 Manual override option

Blank - No manual override
M - Knob type
R - Cable type

6 Port size

0 - Cartridge only

Code	Port size	Housing number
3B	3/8” BSPP	02-179705
6T	SAE 6	566161
2G	1/4 ” BSPP	876709
3G	3/8” BSPP	876715
6H	SAE 6	876708
8H	SAE 8	876713

See pages 78 & 79 for housings

7 Voltage rating

00 - No coil
12D - 12VDC
24D - 24VDC
36D - 36VDC
24A - 24VAC
120A- 120VAC
240A- 240VAC
12B - 12VDC/w diode*
24B - 24VDC/w diode*

*optional arc suppression diode

8 Connector types

Blank - No coil

Voltage	**G** - ISO 4400 DIN 43650	**P** - 1/2” NPT conduit port w/ leadwire	**Q** - Spade terminals	**W** - Leadwire	**N** - Deutsch (DC only)	**Y** - Amp JR (DC only)
12D	02–178086	02-178078	02-178070	02-178063	02-178093	02-178711
24D	02–178087	02-178079	02-178073	02-178065	02-178094	02-178712
36D	02–178089	02-178080	02-178075	02-178066	02-178095	02-178713
24A	02–178112	02-178104	02-178103	02-178102	–	–
120A	02–178114	02-178106	–	–		
240A	02–178117	02-178109				
12B	02–178840	–	02-178834	02-178832	02-178842	02-178762
24B	02–178841		02-178835	02-178833	02-178843	02-178846

Dimensions

mm (inch)

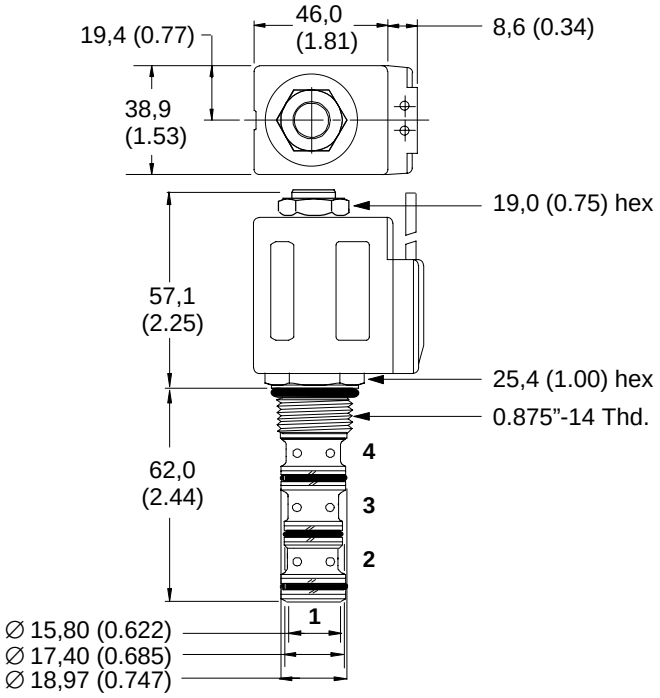

Torque cartridge in housing 47-54 Nm (35-40 lbf ft)

Valve is shown with “W” coil. See other coils on page 81.

Note
When solenoid valve is ordered as cartridge only, nut is included.

For valve dimensions with manual override option installed see page 83

WARNING

Maintain 5-8 Nm (4-6 lbf ft) maximum torque on valve tube nut. Overtightening may cause valve failure.

SV5-10-4/4M/4R

4-way, 2-position, spool type solenoid valve

Functional symbol

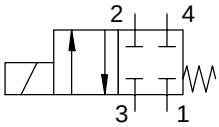

Sectional view

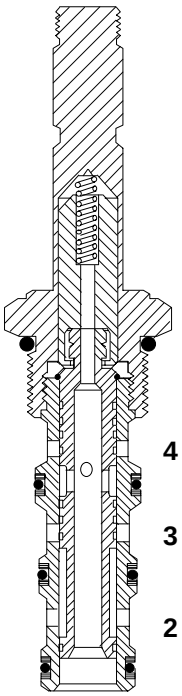

Description

The SV5-10-4 is a 4-way, 2-position, direct acting, spool type, screw-in cartridge solenoid valve.

Operation

In the de-energized position, all ports are blocked. In the energized position port 2 is open to port 3 and port 1 is open to port 4.

Ratings and specifications

Performance data is typical with fluid at 21,8 cSt (105 SUS) and 49°C (120°F)

Typical application pressure (all ports) . . . . . 210 bar (3000 psi)

Cartridge fatigue pressure (infinite life) . . . . . 210 bar (3000 psi)

Rated flow . . . . . 23 l/min (6 USgpm)

Internal leakage . . . . . 164 cm^3/min. (10 in^3/min) maximum @ 210 bar (3000 psi)

Temperature range . . . . . –40 to 120°C (–40° to 248°F)

Coil duty . . . . . Continuous from 85% to 110% nominal voltage

Cavity . . . . . C-10-4 (See page 75)

Fluids . . . . . All general purpose hydraulic fluids such as: MIL-H-5606, SAE 10, SAE 20, etc.

Filtration . . . . . Cleanliness code 18**/16/13**

Standard housing material . . . . . Aluminum

Weight including coil . . . . . 0,44 kg (0.96 lb.)

Seal kit . . . . . 565805 Buna-N
889600 Viton®

Viton is a registered trademark of E.I. DuPont Co.

Pressure Drop Curves

Cartridge only

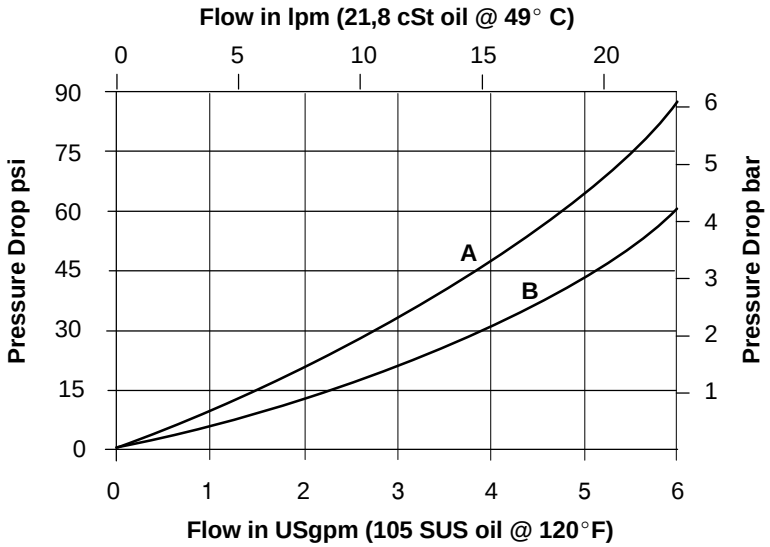

A -Port 1 to port 4
B -Port 3 to port 2

SV5 - 10 (V) - 4 (*) - * * - ** ***

1 2 3 4 5 6 7 8

1 Function

SV5 – Solenoid valve

2 Size

10 - 10 Size

3 Seals

Blank- Buna-N
V - Viton

4 Style

4 - 4-way

5 Manual override option

Blank - No manual override
M - Knob type
R - Cable type

6 Port size

0 - Cartridge only

Code	Port size	Housing number
3B	3/8” BSPP	02-179705
6T	SAE 6	566161
2G	1/4 ” BSPP	876709
3G	3/8” BSPP	876715
6H	SAE 6	876708
8H	SAE 8	876713

See pages 78 & 79 for housings

7 Voltage rating

00 - No coil
12D - 12VDC
24D - 24VDC
36D - 36VDC
24A - 24VAC
120A- 120VAC
240A- 240VAC
12B - 12VDC/w diode*
24B - 24VDC/w diode*

*optional arc suppression diode

8 Connector types

Blank - No coil

Voltage	**G** - ISO 4400 DIN 43650	**P** - 1/2” NPT conduit port w/ leadwire	**Q** - Spade terminals	**W** - Leadwire	**N** - Deutsch (DC only)	**Y** - Amp JR (DC only)
12D	02–178086	02-178078	02-178070	02-178063	02-178093	02-178711
24D	02–178087	02-178079	02-178073	02-178065	02-178094	02-178712
36D	02–178089	02-178080	02-178075	02-178066	02-178095	02-178713
24A	02–178112	02-178104	02-178103	02-178102	–	–
120A	02–178114	02-178106	–	–		
240A	02–178117	02-178109				
12B	02–178840	–	02-178834	02-178832	02-178842	02-178762
24B	02–178841		02-178835	02-178833	02-178843	02-178846

Dimensions

mm (inch)

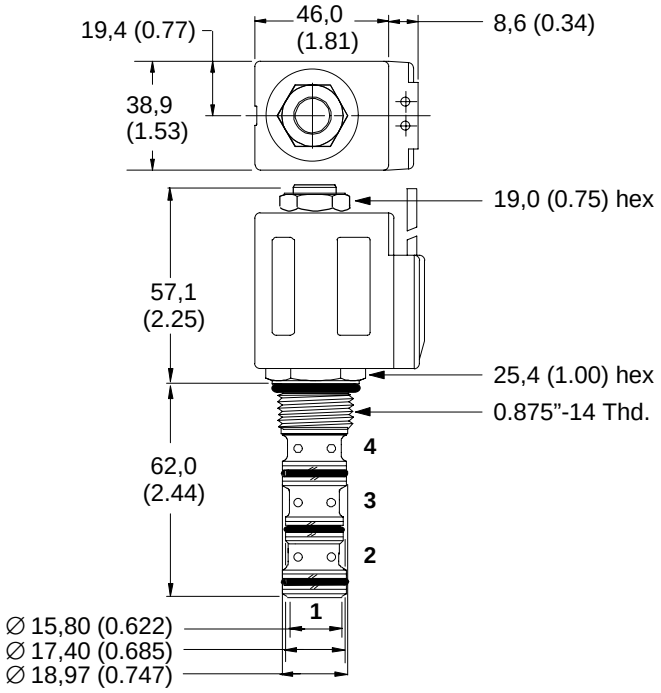

Torque cartridge in housing 47-54 Nm (35-40 lbf ft)

Valve is shown with “W” coil. See other coils on page 81.

Note
When solenoid valve is ordered as cartridge only, nut is included.

For valve dimensions with manual override option installed see page 83

WARNING

Maintain 5-8 Nm (4-6 lbf ft) maximum torque on valve tube nut. Overtightening may cause valve failure.

SV7-10-4/4P/4S

4-way, 2-position, spool type solenoid valve

Functional symbol

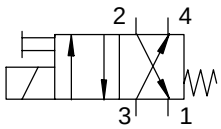

Sectional view

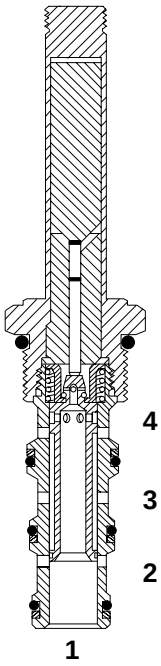

Description

The SV7-10-4 is a 4-way, 2-position, direct acting, spool type, screw-in cartridge solenoid valve.

Operation

In the de-energized position, port 3 is open to port 4 and port 2 is open to port 1.

Ratings and specifications

Performance data is typical with fluid at 21,8 cSt (105 SUS) and 49°C (120°F)

Typical application pressure (all ports) . . . . . 210 bar (3000 psi)

Cartridge fatigue pressure (infinite life) . . . . . 210 bar (3000 psi)

Rated flow . . . . . 17 l/min (5 USgpm)

Internal leakage . . . . . 164 cm^3/min. (10 in^3/min) maximum @ 210 bar (3000 psi)

Temperature range . . . . . –40 to 120°C (–40° to 248°F)

Coil duty . . . . . Continuous from 85% to 110% nominal voltage

Cavity . . . . . C-10-4 (See page 75)

Fluids . . . . . All general purpose hydraulic fluids such as: MIL-H-5606, SAE 10, SAE 20, etc.

Filtration . . . . . Cleanliness code 18/**16/13**

Standard housing material . . . . . Aluminum

Weight including coil . . . . . 0,44 kg (0.96 lb.)

Seal kit . . . . . 565805 Buna-N
889600 Viton®

Viton is a registered trademark of E.I. DuPont Co.

Pressure Drop Curves

Cartridge only

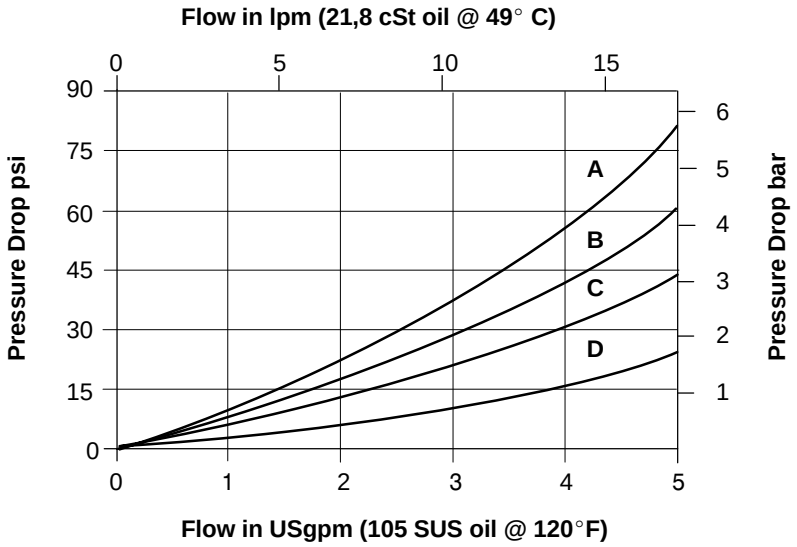

A-Port 4 to port 1 energized
B-Port 3 to port 2 energized
C-Port 3 to port 4 energized
D-Port 2 to port 1 de-energized

SV7 - 10 (V) - 4 (*) - * * - ** ***

1 2 3 4 5 6 7 8

1 Function

SV7 – Solenoid valve

2 Size

10 - 10 Size

3 Seals

Blank- Buna-N
V - Viton

4 Style

4 - 4-way

5 Manual override option

Blank - No manual override
P - Push type
S - Screw type

6 Port size

0 - Cartridge only

Code	Port size	Housing number
3B	3/8" BSPP	02-179705
6T	SAE 6	566161
2G	1/4 " BSPP	876709
3G	3/8" BSPP	876715
6H	SAE 6	876708
8H	SAE 8	876713

See pages 78 & 79 for housings

7 Voltage rating

00 - No coil
12D - 12VDC
24D - 24VDC
36D - 36VDC
24A - 24VAC
120A- 120VAC
240A- 240VAC
12B - 12VDC/w diode*
24B - 24VDC/w diode*

*optional arc suppression diode

8 Connector types

Blank - No coil

Voltage	**G** - ISO 4400 DIN 43650	**P** - 1/2" NPT conduit port w/ leadwire	**Q** - Spade terminals	**W** - Leadwire	**N** - Deutsch (DC only)	**Y** - Amp JR (DC only)
12D	02–178086	02-178078	02-178070	02-178063	02-178093	02-178711
24D	02–178087	02-178079	02-178073	02-178065	02-178094	02-178712
36D	02–178089	02-178080	02-178075	02-178066	02-178095	02-178713
24A	02–178112	02-178104	02-178103	02-178102	–	–
120A	02–178114	02-178106	–	–		
240A	02–178117	02-178109				
12B	02–178840	–	02-178834	02-178832	02-178842	02-178762
24B	02–178841		02-178835	02-178833	02-178843	02-178846

Dimensions

mm (inch)

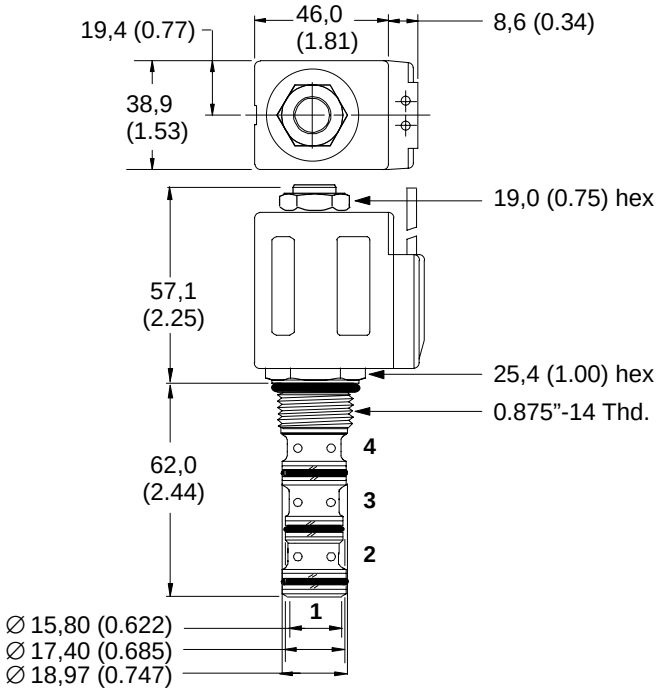

Torque cartridge in housing 47-54 Nm (35-40 lbf ft)

Valve is shown with "W" coil. See other coils on page 81.

Note
When solenoid valve is ordered as cartridge only, nut is included.

For valve dimensions with manual override option installed see page 83

WARNING

Maintain 5-8 Nm (4-6 lbf ft) maximum torque on valve tube nut. Overtightening may cause valve failure.

SV9-10-A
4-way, 3-position, tandem center solenoid valve

Functional symbol

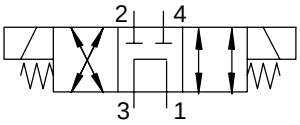

Sectional view

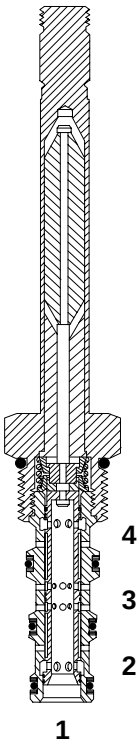

Description

The SV9-10-A is a 4-way, 3-position, spool type, tandem center, direct acting, screw-in cartridge solenoid valve.

Operation

In the de-energized position, this valve allows flow from port 3 to port 1 and blocks ports 2 and 4. When solenoid 1 is energized, flow is directed from port 3 to port 2 and from port 4 to port 1. When solenoid 2 is energized, flow is directed from port 3 to port 4 and from port 2 to port 1.

Ratings and specifications

Performance data is typical with fluid at 21,8 cSt (105 SUS) and 49°C (120°F)

Typical application pressure (all ports)	210 bar (3000 psi)
Cartridge fatigue pressure (infinite life)	210 bar (3000 psi)
Rated flow	11 l/min (3 USgpm)
Internal leakage	246 cm^3/min (15 in^3/min) maximum @ 210 bar (3000 psi)
Temperature range	–40 to 120°C (–40° to 248°F)
Coil duty	Continuous from 85% to 110% nominal voltage
Cavity	C-10-4 (See page 75)
Fluids	All general purpose hydraulic fluids such as: MIL-H-5606, SAE 10, SAE 20, etc.
Filtration	Cleanliness code 18/**16/13**
Standard housing material	Aluminum
Weight including coil	0,77 kg (1.70 lb.)
Seal kit	889625 Buna-N 566080 Viton®

Viton is a registered trademark of E.I. DuPont Co.

Pressure Drop Curves
Cartridge only

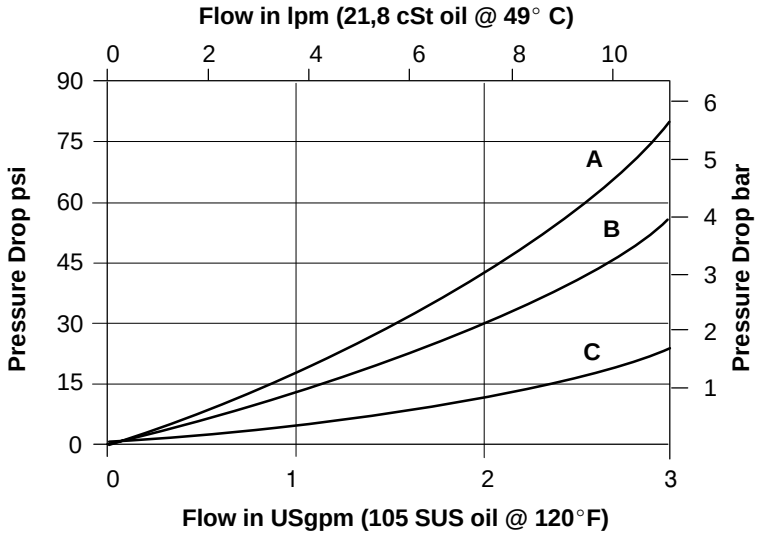

A -Port 3 to port 2 or 4
B -Port 2 or 4 to port 1
C -Port 3 to port 1

SV9 - 10 (V) - A - ** - ** ***

1 2 3 4 5 6 7

1 Function

SV9 – Solenoid valve

2 Size

10 - 10 Size

3 Seals

Blank- Buna-N
V - Viton

4 Spool center condition

A - Tandem center

5 Port size

0 - Cartridge only

Code	Port size	Housing number
3B	3/8” BSPP	02-179705
6T	SAE 6	566161
2G	1/4 ” BSPP	876709
3G	3/8” BSPP	876715
6H	SAE 6	876708
8H	SAE 8	876713

See pages 78 & 79 for housings

6 Voltage rating

00 - No coil
12D - 12VDC
24D - 24VDC
36D - 36VDC
24A - 24VAC
120A- 120VAC
240A- 240VAC
12B - 12VDC/w diode*
24B - 24VDC/w diode*

*optional arc suppression diode

7 Connector types

Blank - No coil

Voltage	**G** - ISO 4400 DIN 43650	**P** - 1/2” NPT conduit port w/ leadwire	**Q** - Spade terminals	**W** - Leadwire	**N** - Deutsch (DC only)	**Y** - Amp JR (DC only)
12D	02–178086	02-178078	02-178070	02-178063	02-178093	02-178711
24D	02–178087	02-178079	02-178073	02-178065	02-178094	02-178712
36D	02–178089	02-178080	02-178075	02-178066	02-178095	02-178713
24A	02–178112	02-178104	02-178103	02-178102	–	–
120A	02–178114	02-178106	–	–		
240A	02–178117	02-178109				
12B	02–178840	–	02-178834	02-178832	02-178842	02-178862
24B	02–178841		02-178835	02-178833	02-178843	02-178846

Dimensions

mm (inch)

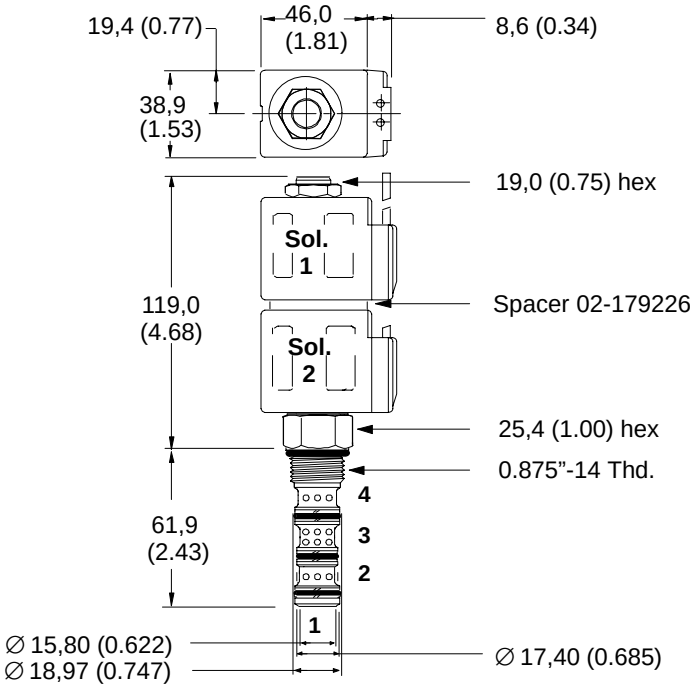

Torque cartridge in housing 47-54 Nm (35-40 lbf ft)

Valve is shown with “W” coil. See other coils on page 81.

Note
When solenoid valve is ordered as cartridge only, nut is included.

WARNING

Maintain 5-8 Nm (4-6 lbf ft) maximum torque on valve tube nut. Overtightening may cause valve failure.

SV9-10-B
4-way, 3-position, open center solenoid valve

Functional symbol

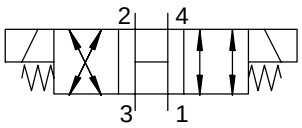

Sectional view

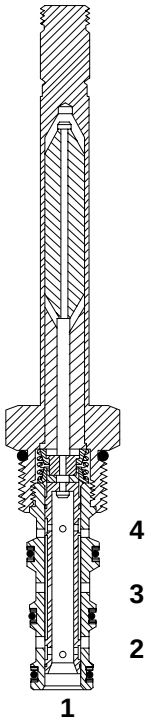

Description

The SV9-10-B is a 4 way, 3-position, spool type, open center, direct acting, screw-in cartridge solenoid valve.

Operation

In the de-energized position, all ports are open to each other. When solenoid 1 is energized, flow is directed from port 3 to port 4 and from port 2 to port 1. When solenoid 2 is energized, flow is directed from port 3 to port 2 and from port 4 to port 1.

Ratings and specifications

Performance data is typical with fluid at 21,8 cSt (105 SUS) and 49°C (120°F)

Typical application pressure (all ports) . . . . . 210 bar (3000 psi)

Cartridge fatigue pressure (infinite life) . . . . . 210 bar (3000 psi)

Rated flow . . . . . 11 l/min (3 USgpm)

Internal leakage . . . . . 246 cm^3/min (15 in^3/min) maximum @ 210 bar (3000 psi)

Temperature range . . . . . –40 to 120°C (–40° to 248°F)

Coil duty . . . . . Continuous from 85% to 110% nominal voltage

Cavity . . . . . C-10-4 (See page 75)

Fluids . . . . . All general purpose hydraulic fluids such as: MIL-H-5606, SAE 10, SAE 20, etc.

Filtration . . . . . Cleanliness code 18/**16/13**

Standard housing material . . . . . Aluminum

Weight including coil . . . . . 0,77 kg (1.70 lb.)

Seal kit . . . . . 889625 Buna-N
566080 Viton®

Viton is a registered trademark of E.I. DuPont Co.

Pressure Drop Curve
Cartridge only

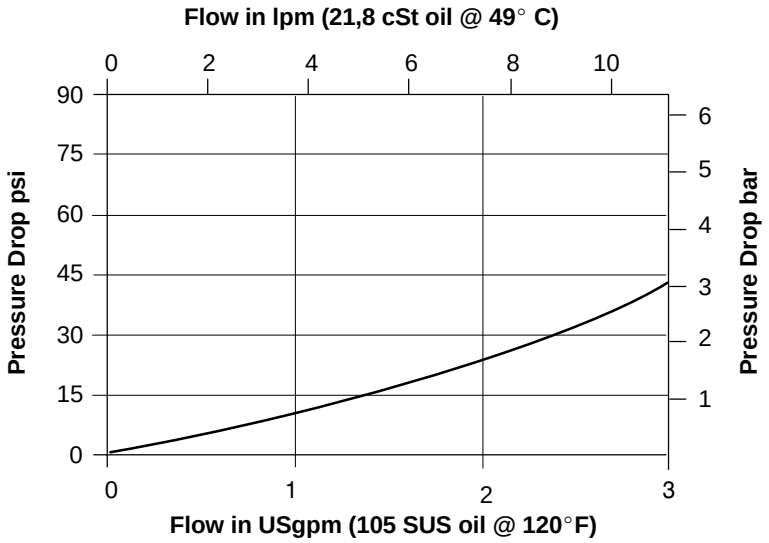

Port 3 to port 2 or port 4
Port 3 to port 4 or port 1

SV9 - 10 (V) - B - ** - ** ***

1 2 3 4 5 6 7

1 Function

SV9 – Solenoid valve

2 Size

10 - 10 Size

3 Seals

Blank- Buna-N
V - Viton

4 Spool center condition

B - Open center

5 Port size

0 - Cartridge only

Code	Port size	Housing number
3B	3/8" BSPP	02-179705
6T	SAE 6	566161
2G	1/4 " BSPP	876709
3G	3/8" BSPP	876715
6H	SAE 6	876708
8H	SAE 8	876713

See pages 78 & 79 for housings

6 Voltage rating

00 - No coil
12D - 12VDC
24D - 24VDC
36D - 36VDC
24A - 24VAC
120A- 120VAC
240A- 240VAC
12B - 12VDC/w diode*
24B - 24VDC/w diode*

*optional arc suppression diode

7 Connector types

Blank - No coil

Voltage	**G** - ISO 4400 DIN 43650	**P** - 1/2" NPT conduit port w/ leadwire	**Q** - Spade terminals	**W** - Leadwire	**N** - Deutsch (DC only)	**Y** - Amp JR (DC only)
12D	02–178086	02-178078	02-178070	02-178063	02-178093	02-178711
24D	02–178087	02-178079	02-178073	02-178065	02-178094	02-178712
36D	02–178089	02-178080	02-178075	02-178066	02-178095	02-178713
24A	02–178112	02-178104	02-178103	02-178102	–	–
120A	02–178114	02-178106	–	–		
240A	02–178117	02-178109				
12B	02–178840	–	02-178834	02-178832	02-178842	02-178862
24B	02–178841		02-178835	02-178833	02-178843	02-178846

Dimensions

mm (inch)

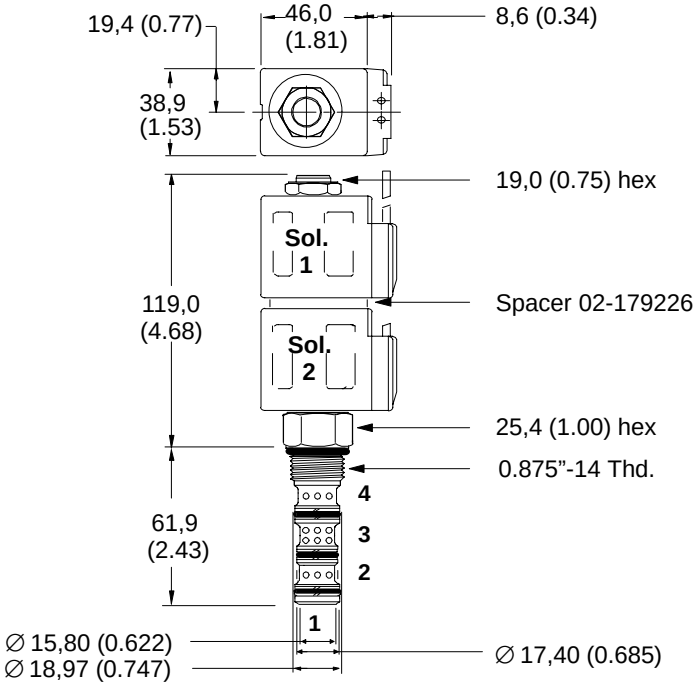

Torque cartridge in housing 47-54 Nm (35-40 lbf ft)

Valve is shown with "W" coil. See other coils on page 81.

Note
When solenoid valve is ordered as cartridge only, nut is included.

WARNING

Maintain 5-8 Nm (4-6 lbf ft) maximum torque on valve tube nut. Overtightening may cause valve failure.

SV9-10-D
4-way, 3-position solenoid valve

Functional symbol

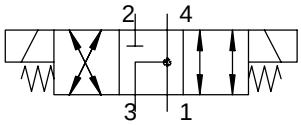

Sectional view

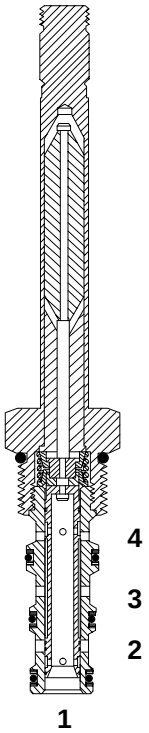

Description

The SV9-10-D is a 4-way, 3-position, spool type, direct acting, screw-in cartridge solenoid valve.

Operation

In the de-energized (center) position, port 1, port 3, and port 4 are open to each other while port 2 is blocked. When solenoid 1 is energized, flow is directed from port 3 to port 4 and from port 2 to port 1. When solenoid 2 is energized, flow is directed from port 3 to port 2 and from port 4 to port 1.

Ratings and specifications

Performance data is typical with fluid at 21,8 cSt (105 SUS) and 49°C (120°F)

Typical application pressure (all ports)	210 bar (3000 psi)
Cartridge fatigue pressure (infinite life)	210 bar (3000 psi)
Rated flow	11 l/min (3 USgpm)
Internal leakage	246 cm^3/min (15 in^3/min) maximum @ 210 bar (3000 psi)
Temperature range	–40 to 120°C (–40° to 248°F)
Coil duty	Continuous from 85% to 110% nominal voltage
Cavity	C-10-4 (See page 75)
Fluids	All general purpose hydraulic fluids such as: MIL-H-5606, SAE 10, SAE 20, etc.
Filtration	Cleanliness code 18/**16/13**
Standard housing material	Aluminum
Weight including coil	0,77 kg (1.70 lb.)
Seal kit	889625 Buna-N 566080 Viton®

Viton is a registered trademark of E.I. DuPont Co.

Pressure Drop Curves
Cartridge only

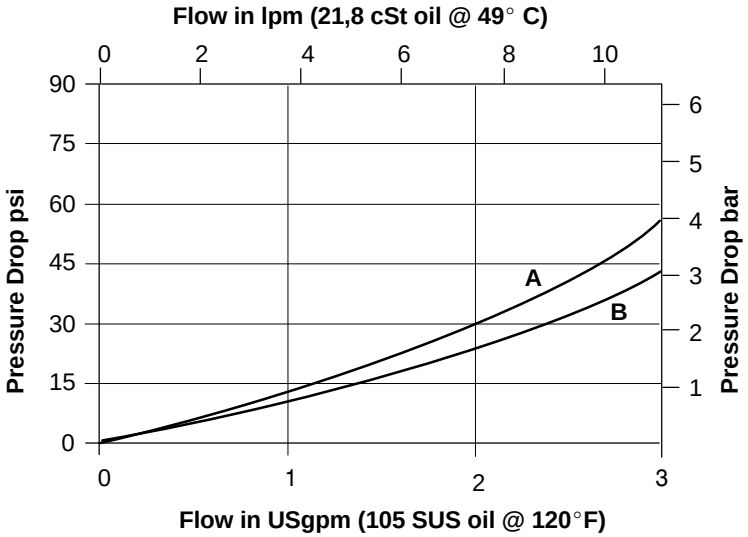

A - Port 3 to port 2
port 2 to port 1
B - Port 3 to port 4
port 4 to port 1

SV9 - 10 (V) - D - ** - ** - ***

1 2 3 4 5 6 7

1 Function

SV9 – Solenoid valve

2 Size

10 - 10 Size

3 Seals

Blank- Buna-N
V - Viton

4 Spool center condition

D - Port 1, 3, and 4 open.
Port 2 closed.

5 Port size

0 - Cartridge only

Code	Port size	Housing number
3B	3/8" BSPP	02-179705
6T	SAE 6	566161
2G	1/4 " BSPP	876709
3G	3/8" BSPP	876715
6H	SAE 6	876708
8H	SAE 8	876713

See pages 78 & 79 for housings

6 Voltage rating

00 - No coil
12D - 12VDC
24D - 24VDC
36D - 36VDC
24A - 24VAC
120A- 120VAC
240A- 240VAC
12B - 12VDC/w diode*
24B - 24VDC/w diode*

*optional arc suppression diode

7 Connector types

Blank - No coil

Voltage	**G** - ISO 4400 DIN 43650	**P** - 1/2" NPT conduit port w/ leadwire	**Q** - Spade terminals	**W** - Leadwire	**N** - Deutsch (DC only)	**Y** - Amp JR (DC only)
12D	02–178086	02-178078	02-178070	02-178063	02-178093	02-178711
24D	02–178087	02-178079	02-178073	02-178065	02-178094	02-178712
36D	02–178089	02-178080	02-178075	02-178066	02-178095	02-178713
24A	02–178112	02-178104	02-178103	02-178102	–	–
120A	02–178114	02-178106	–	–		
240A	02–178117	02-178109				
12B	02–178840	–	02-178834	02-178832	02-178842	02-178862
24B	02–178841		02-178835	02-178833	02-178843	02-178846

Dimensions

mm (inch)

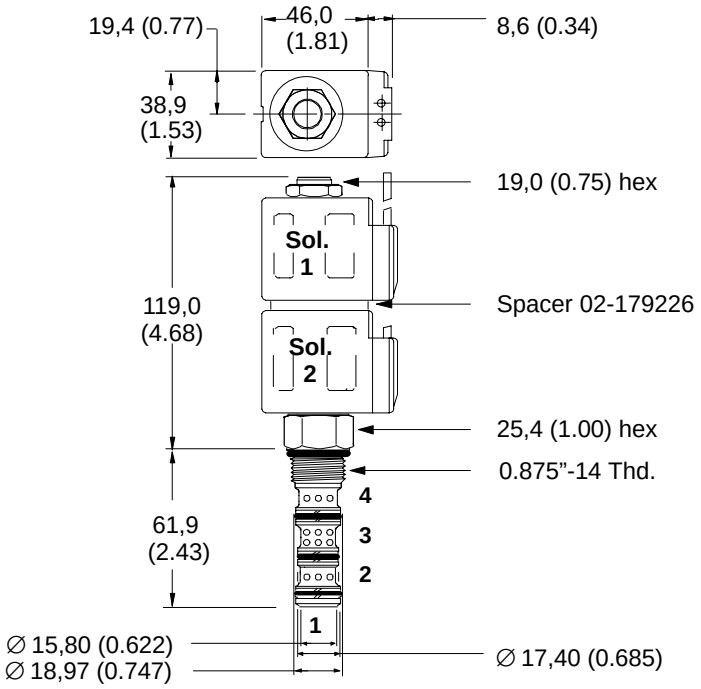

Torque cartridge in housing 47-54 Nm (35-40 lbf ft)

Valve is shown with "W" coil. See other coils on page 81.

Note
When solenoid valve is ordered as cartridge only, nut is included.

WARNING

Maintain 5-8 Nm (4-6 lbf ft) maximum torque on valve tube nut. Overtightening may cause valve failure.

SV9-10-E
4-way, 3-position, closed center solenoid valve

Functional symbol

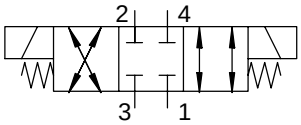

Sectional view

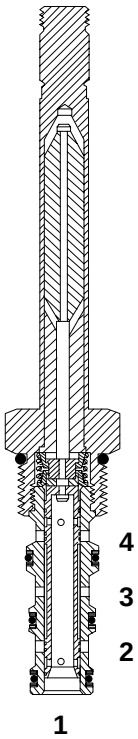

Description

The SV9-10-E is a 4-way, 3-position, spool type, closed center, direct acting, screw-in cartridge solenoid valve.

Operation

In the de-energized (center) position, all ports are blocked. When solenoid 1 is energized, flow is directed from port 3 to port 4 and from port 2 to port 1. When solenoid 2 is energized, flow is directed from port 3 to port 2 and from port 4 to port 1.

Ratings and specifications

Performance data is typical with fluid at 21,8 cSt (105 SUS) and 49°C (120°F)

Typical application pressure (all ports) . . . . . 210 bar (3000 psi)

Cartridge fatigue pressure (infinite life) . . . . . 210 bar (3000 psi)

Rated flow . . . . . 11 l/min (3 USgpm)

Internal leakage . . . . . 246 cm^3/min (15 in^3/min) maximum @ 210 bar (3000 psi)

Temperature range . . . . . –40 to 120°C (–40° to 248°F)

Coil duty . . . . . Continuous from 85% to 110% nominal voltage

Cavity . . . . . C-10-4 (See page 75)

Fluids . . . . . All general purpose hydraulic fluids such as: MIL-H-5606, SAE 10, SAE 20, etc.

Filtration . . . . . Cleanliness code 18/**16/13**

Standard housing material . . . . . Aluminum

Weight including coil . . . . . 0,77 kg (1.70 lb.)

Seal kit . . . . . 889625 Buna-N
566080 Viton®

Viton is a registered trademark of E.I. DuPont Co.

Pressure Drop Curve
Cartridge only

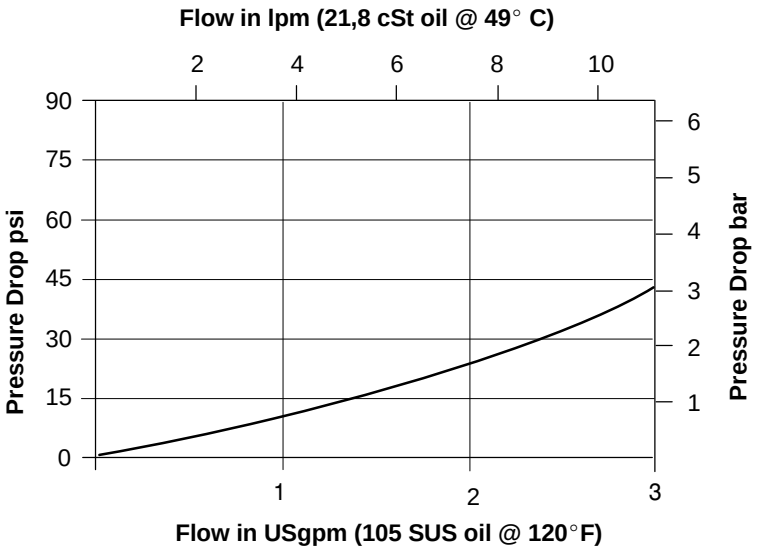

Port 3 to port 2 or port 4
Port 2 or port 4 to port 1

SV9 - 10 (V) - E- **-** ***

1 2 3 4 5 6 7

1 Function

SV9 – Solenoid valve

2 Size

10 - 10 Size

3 Seals

Blank- Buna-N
V - Viton

4 Spool center condition

E - Closed center

5 Port size

0 - Cartridge only

Code	Port size	Housing number
3B	3/8” BSPP	02-179705
6T	SAE 6	566161
2G	1/4 ” BSPP	876709
3G	3/8” BSPP	876715
6H	SAE 6	876708
8H	SAE 8	876713

See pages 78 & 79 for housings

6 Voltage rating

00 - No coil
12D - 12VDC
24D - 24VDC
36D - 36VDC
24A - 24VAC
120A- 120VAC
240A- 240VAC
12B - 12VDC/w diode*
24B - 24VDC/w diode*

*optional arc suppression diode

7 Connector types

Blank - No coil

Voltage	**G** - ISO 4400 DIN 43650	**P** - 1/2” NPT conduit port w/ leadwire	**Q** - Spade terminals	**W** - Leadwire	**N** - Deutsch (DC only)	**Y** - Amp JR (DC only)
12D	02–178086	02-178078	02-178070	02-178063	02-178093	02-178711
24D	02–178087	02-178079	02-178073	02-178065	02-178094	02-178712
36D	02–178089	02-178080	02-178075	02-178066	02-178095	02-178713
24A	02–178112	02-178104	02-178103	02-178102	–	–
120A	02–178114	02-178106	–	–		
240A	02–178117	02-178109				
12B	02–178840	–	02-178834	02-178832	02-178842	02-178862
24B	02–178841		02-178835	02-178833	02-178843	02-178846

Dimensions
mm (inch)

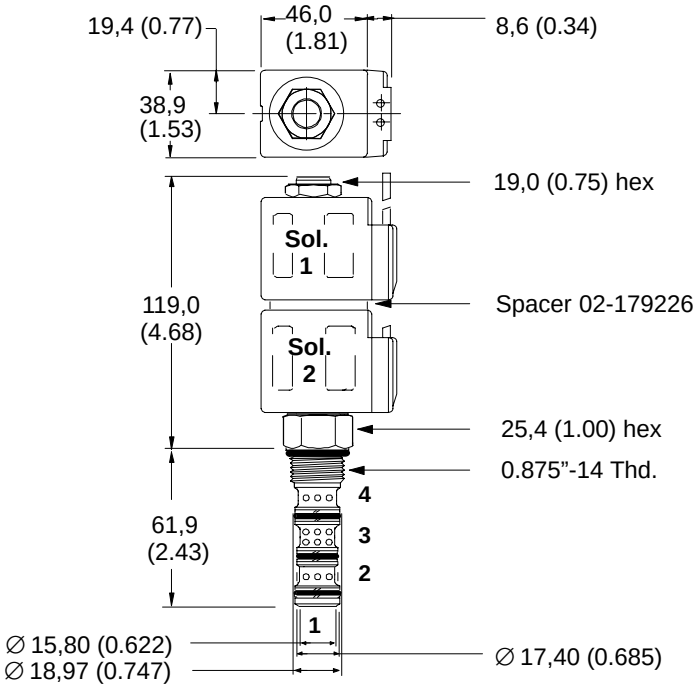

Torque cartridge in housing 47-54 Nm (35-40 lbf ft)

Valve is shown with “W” coil. See other coils on page 81.

Note
When solenoid valve is ordered as cartridge only, nut is included.

WARNING

Maintain 5-8 Nm (4-6 lbf ft) maximum torque on valve tube nut. Overtightening may cause valve failure.

SV9-10-F
4-way, 3-position, motor spool solenoid valve

Functional symbol

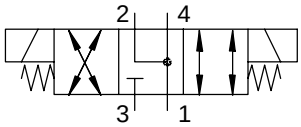

Sectional view

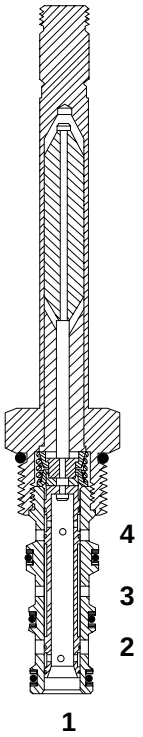

Description

The SV9-10-F is a 4-way, 3-position, spool type, motor spool, direct acting, screw-in cartridge solenoid valve.

Operation

In the de-energized (center) position, port 1, port 2, and port 4 are open to each other, while port 3 is blocked. When solenoid 1 is energized, flow is directed from port 3 to port 4 and from port 2 to port 1. When solenoid 2 is energized, flow is directed from port 3 to port 2 and from port 4 to port 1.

Ratings and specifications

Performance data is typical with fluid at 21,8 cSt (105 SUS) and 49°C (120°F)

Typical application pressure (all ports)	210 bar (3000 psi)
Cartridge fatigue pressure (infinite life)	210 bar (3000 psi)
Rated flow	11 l/min (3 USgpm)
Internal leakage	246 cm^3/min (15 in^3/min) maximum @ 210 bar (3000 psi)
Temperature range	–40 to 120°C (–40° to 248°F)
Coil duty	Continuous from 85% to 110% nominal voltage
Cavity	C-10-4 (See page 75)
Fluids	All general purpose hydraulic fluids such as: MIL-H-5606, SAE 10, SAE 20, etc.
Filtration	Cleanliness code 18/**16/13**
Standard housing material	Aluminum
Weight including coil	0,77 kg (1.70 lb.)
Seal kit	889625 Buna-N 566080 Viton®

Viton is a registered trademark of E.I. DuPont Co.

Pressure Drop Curve
Cartridge only

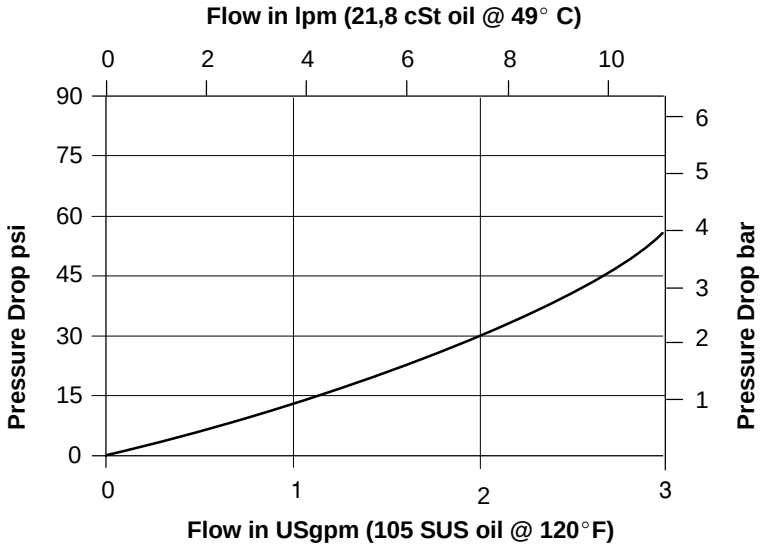

Port 1 to port 2 or port 4

SV9 - 10 (V) - F - * * - ** ***

1 2 3 4 5 6 7

1 Function

SV9 – Solenoid valve

2 Size

10 - 10 Size

3 Seals

Blank- Buna-N
V - Viton

4 Spool center condition

F - Motor spool

5 Port size

0 - Cartridge only

Code	Port size	Housing number
3B	3/8" BSPP	02-179705
6T	SAE 6	566161
2G	1/4 " BSPP	876709
3G	3/8" BSPP	876715
6H	SAE 6	876708
8H	SAE 8	876713

See pages 78 & 79 for housings

6 Voltage rating

00 - No coil
12D - 12VDC
24D - 24VDC
36D - 36VDC
24A - 24VAC
120A- 120VAC
240A- 240VAC
12B - 12VDC/w diode*
24B - 24VDC/w diode*

*optional arc suppression diode

7 Connector types

Blank - No coil

Voltage	**G** - ISO 4400 DIN 43650	**P** - 1/2" NPT conduit port w/ leadwire	**Q** - Spade terminals	**W** - Leadwire	**N** - Deutsch (DC only)	**Y** - Amp JR (DC only)
12D	02–178086	02-178078	02-178070	02-178063	02-178093	02-178711
24D	02–178087	02-178079	02-178073	02-178065	02-178094	02-178712
36D	02–178089	02-178080	02-178075	02-178066	02-178095	02-178713
24A	02–178112	02-178104	02-178103	02-178102	–	–
120A	02–178114	02-178106	–	–		
240A	02–178117	02-178109				
12B	02–178840	–	02-178834	02-178832	02-178842	02-178862
24B	02–178841		02-178835	02-178833	02-178843	02-178846

Dimensions

mm (inch)

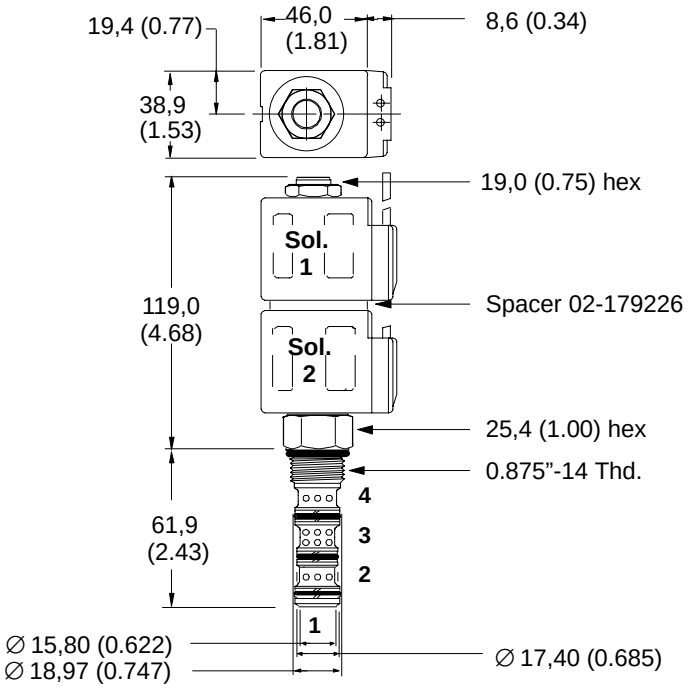

Torque cartridge in housing 47-54 Nm (35-40 lbf ft)

Valve is shown with "W" coil. See other coils on page 81.

Note
When solenoid valve is ordered as cartridge only, nut is included.

WARNING

Maintain 5-8 Nm (4-6 lbf ft) maximum torque on valve tube nut. Overtightening may cause valve failure.

SV9-10-G
4-way, 3-position solenoid valve

Functional symbol

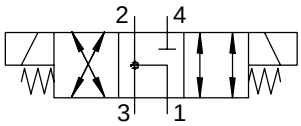

Sectional view

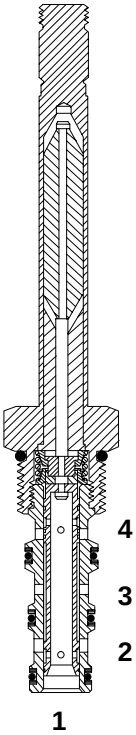

Description

The SV9-10-G is a 4-way, 3-position, spool type, direct acting screw-in cartridge solenoid valve.

Operation

In the de-energized (center) position, port 1, port 2, and port 3 are open to each other, while port 4 is blocked. When solenoid 1 is energized, flow is directed from port 3 to port 4 and from port 2 to port 1. When solenoid 2 is energized, flow is directed from port 3 to port 2 and from port 4 to port 1.

Ratings and specifications

Performance data is typical with fluid at 21,8 cSt (105 SUS) and 49°C (120°F)

Typical application pressure (all ports) . . . . . 210 bar (3000 psi)

Cartridge fatigue pressure (infinite life) . . . . . 210 bar (3000 psi)

Rated flow . . . . . 11 l/min (3 USgpm)

Internal leakage . . . . . 246 cm^3/min (15 in^3/min.) maximum @ 210 bar (3000 psi)

Temperature range . . . . . –40 to 120°C (–40° to 248°F)

Coil duty . . . . . Continuous from 85% to 110% nominal voltage

Cavity . . . . . C-10-4 (See page 75)

Fluids . . . . . All general purpose hydraulic fluids such as: MIL-H-5606, SAE 10, SAE 20, etc.

Filtration . . . . . Cleanliness code 18/**16/13**

Standard housing material . . . . . Aluminum

Weight including coil . . . . . 0,77 kg (1.70 lb.)

Seal kit . . . . . 889625 Buna-N
566080 Viton®

Viton is a registered trademark of E.I. DuPont Co.

Pressure Drop Curves
Cartridge only

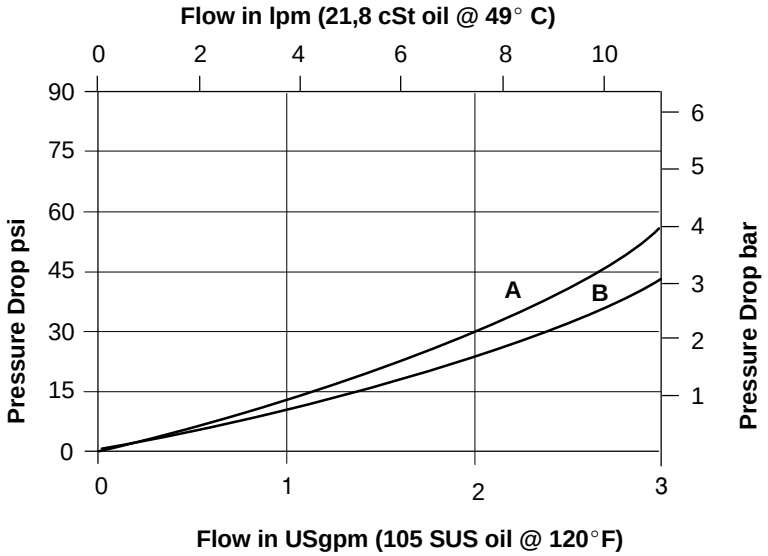

A -Port 3 to port 4
Port 4 to port 1

B -Port 3 to port 2
Port 2 to port 1

SV9 - 10 (V) - G - ** - ** ***

1 2 3 4 5 6 7

1 Function

SV9 - Solenoid valve

2 Size

10 - 10 size

3 Seals

Blank - Buna-N
V - Viton

4 Spool center condition

G - Ports 1, 2, and 3 open. Port 4 blocked.

5 Port size

0 - Cartridge only

Code	Port size	Housing number
3B	3/8" BSPP	02-179705
6T	SAE 6	566161
2G	1/4 " BSPP	876709
3G	3/8" BSPP	876715
6H	SAE 6	876708
8H	SAE 8	876713

See pages 78 & 79 for housings

6 Voltage rating

00 - No coil
12D - 12VDC
24D - 24VDC
36D - 36VDC
24A - 24VAC
120A - 120VAC
240A - 240VAC
12B - 12VDC/w diode*
24B - 24VDC/w diode*

*optional arc suppression diode

7 Connector types

Blank - No coil

Voltage	**G** - ISO 4400 DIN 43650	**P** - 1/2" NPT conduit port w/ leadwire	**Q** - Spade terminals	**W** - Leadwire	**N** - Deutsch (DC only)	**Y** - Amp JR (DC only)
12D	02–178086	02-178078	02-178070	02-178063	02-178093	02-178711
24D	02–178087	02-178079	02-178073	02-178065	02-178094	02-178712
36D	02–178089	02-178080	02-178075	02-178066	02-178095	02-178713
24A	02–178112	02-178104	02-178103	02-178102	–	–
120A	02–178114	02-178106	–	–		
240A	02–178117	02-178109				
12B	02–178840	–	02-178834	02-178832	02-178842	02-178862
24B	02–178841		02-178835	02-178833	02-178843	02-178846

Dimensions

mm (inch)

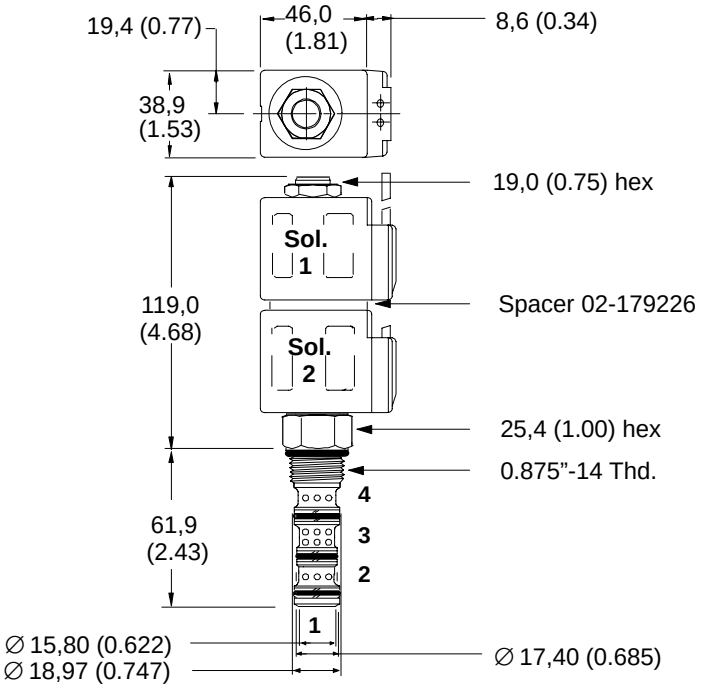

Torque cartridge in housing 47-54 Nm (35-40 lbf ft)

Valve is shown with "W" coil. See other coils on page 81.

Note
When solenoid valve is ordered as cartridge only, nut is included.

WARNING

Maintain 5-8 Nm (4-6 lbf ft) maximum torque on valve tube nut. Overtightening may cause valve failure.

C-**-2 (U) Cavity Dimensions

Dimensions

millimeter (inch)

Cavity bores can be machined accurately in aluminum. The necessary UNF, or UN threads may be machined using standard small tools, possibly already in your machine shop or from a local tool supplier. For in depth advice on the machining of cavities, consult your Vickers sales specialist.

Either you, our customer, or Vickers can design and manufacture customized manifolds or housings dedicated to individual applications. We call the resulting valve packages Modular Circuit Designs (MCDs). Cartridges selected for your application can be accomodated in one or more MCDs, according to your requirements.

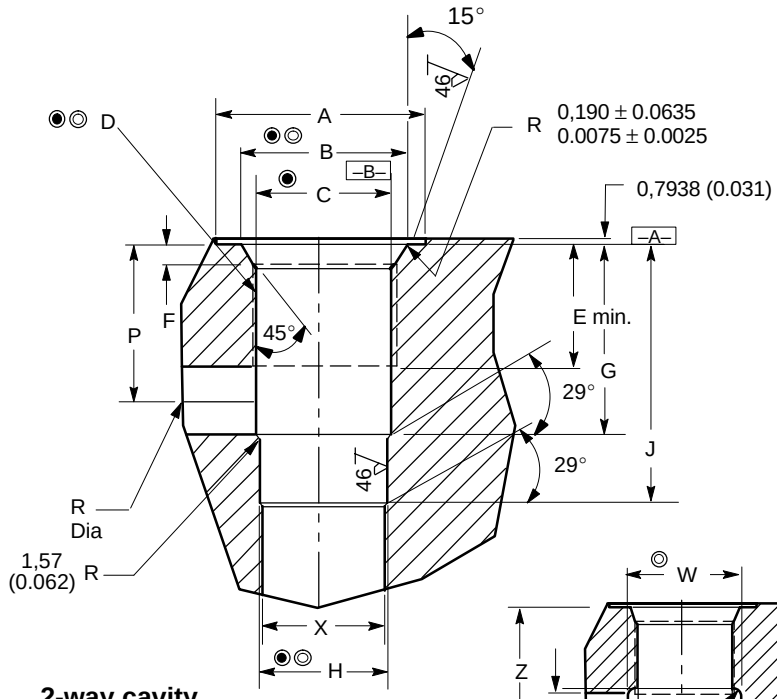

2-way cavity

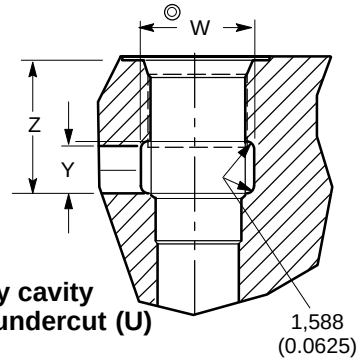

2–way cavity with undercut (U)

◉ These diameters ↗ 0,051 mm (.002 inch) B unless otherwise specified.

◎ These diameters ⊥ 0,025 mm (.001 inch) A unless otherwise specified.

Cavity mm (inch)	**A Spotface**	**B +0,051 0 (+0.002 0)**	**C +0,051 0 (+0.002 0)**	**D Thread**	**E Full Thread**	**F**	**G**	**H ±0,0254 (±0.001)**	**J**	**P**	**R Max. Dia.**	**X Max. Dia.**
C–8–2	30,16 (1.188)	20,65 (0.813)	17,47 (0.688)	.750”–16	12,70 (0.500)	2,54/2,92 (0.100/0.115)	19,05 (0.750)	12,72 (0.501)	30,17 (1.188)	14,68 (0.578)	8,74 (0.344)	11,11 (0.438)
C–10–2	30,16 (1.188)	24,00 (0.945)	20,62 (0.812)	.875”–14	15,88 (0.625)	2,54/2,92 (0.100/0.115)	23,81 (0.937)	15,90 (0.626)	33,32 (1.312)	18,23 (0.718)	11,11 (0.437)	14,29 (0.562)
C–12–2 (U)	38,10 (1.500)	29,15 (1.148)	24,76 (0.975)	1.062”-12	22,22 (0.875)	3,30/3,68 (0.130/0.145)	34,92 (1.375)	23,82 (0.938)	46,35 (1.825)	27,94 (1.100)	12,70 (0.500)	22,22 (0.875)
C–16–2	44,45 (1.750)	35,58 (1.401)	31,34 (1.234)	1.312”–12	22,22 (0.875)	3,30/3,68 (0.130/0.145)	34,14 (1.344)	28,62 (1.127)	46,84 (1.844)	24,60 (0.968)	19,05 (0.750)	19,05 (0.750)
C–20–2	57,66 (2.270)	43,59 (1.716)	39,12 (1.540)	1.625”–12	20,64 (0.812)	3,35/3,73 (0.132/0.147)	44,45 (1.750)	36,55 (1.439)	58,72 (2.312)	30,96 (1.218)	25,40 (1.000)	30,16 (1.187)

Cavity mm (inch)	**W**	**Y Max. dia.**	**Z**
C–12–2U (only)	30,83 (1.214)	12,70 (0.500)	34,29 (1.350)

C-**-3 & C-**-4 Cavity Dimensions

Dimensions

millimeter (inch)

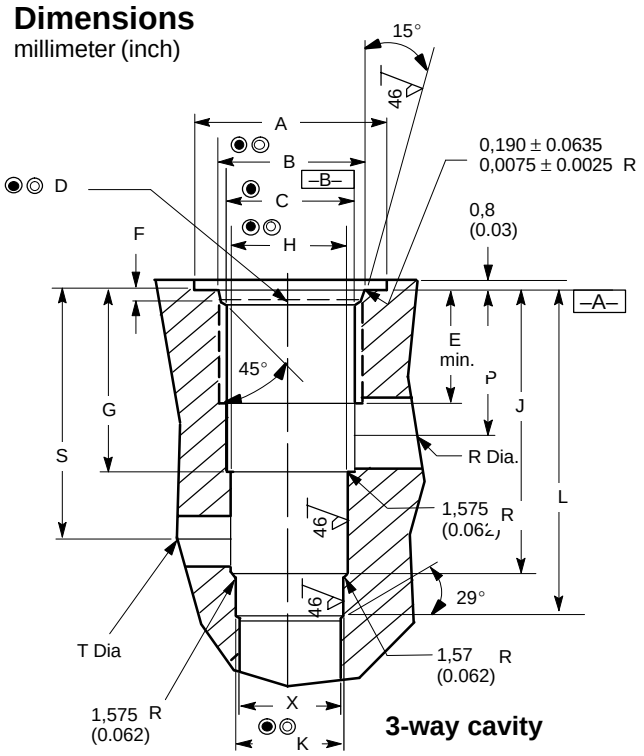

3-way cavity

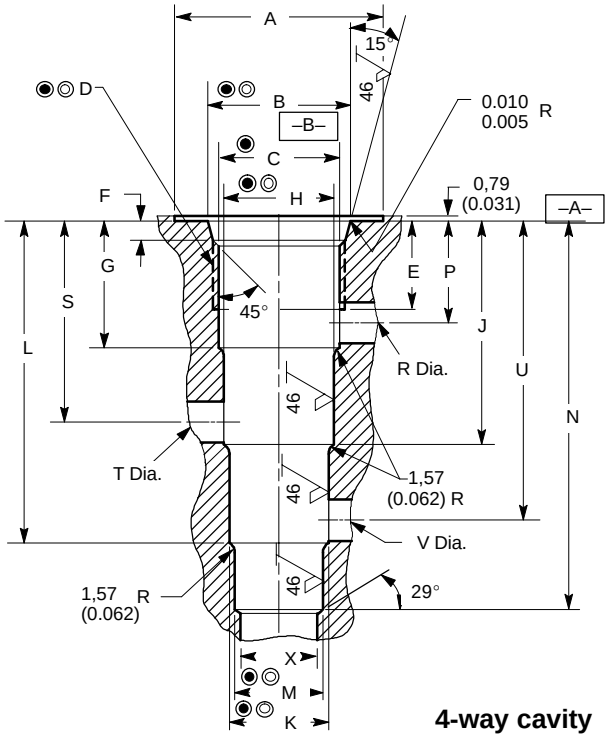

4-way cavity

◉ These diameters ⟋ 0,051 mm (.002 inch) B unless otherwise specified.

◎ These diameters ⊥ 0,025 mm (.001 inch) A unless otherwise specified.

Cavity	A Spotface	B +0,051 0 (+0.002 0)	C +0,051 0 (+0.002 0)	D Thread	E Full Thread	F	G	H ± 0,0254 (± 0.001)	J	K ± 0,0254 (± 0.001)	L
C–8–3	30,16 (1.188)	20,65 (0.813)	17,47 (0.688)	0.750”–16	12,70 (0.500)	2,65/2,92 (0.100/0.115)	18,24 (0.718)	15,90 (0.626)	33,26 (1.270)	14,30 (0.563)	43,26 (1.703)
C–10–3	30,16 (1.188)	24,00 (0.945)	20,62 (0.812)	0.875”–14	15,88 (0.625)	2,65/2,92 (0.100/0.115)	21,59 (0.850)	17,50 (0.689)	38,10 (1.500)	15,90 (0.626)	47,62 (1.875)
C–8–4	30,16 (1.188)	20,65 (0.813)	17,47 (0.688)	0.750”–16	12,70 (0.500)	2,54/2,92 (0.100/0.115)	18,24 (0.718)	15,90 (0.626)	32,26 (1.270)	14,30 (0.563)	46,48 (1.830)
C–10–4	30,16 (1.188)	24,00 (0.945)	20,62 (0.812)	0.875”–14	15,88 (0.625)	2,54/2,92 (0.100/0.115)	22,22 (0.875)	19,08 (0.751)	38,10 (1.500)	17,50 (0.689)	53,96 (2.125)

Cavity	M	N	P	R Max. Dia.	S	T Max. Dia.	U	V	X Max. Dia.
C–8–3	–	–	14,68 (0.578)	5,94 (0.234)	28,98 (1.141)	5,94 (0.234)	–	–	12,70 (0.501)
C–10–3	–	–	18,26 (0.719)	6,35 (0.250)	34,13 (1.344)	6,35 (0.25)	–	–	14,29 (0.562)
C–8–4	12,72 (0.501)	56,13 (2.210)	14,68 (0.578)	5,94 (0.234)	28,98 (1.141)	5,94 (0.234)	43,25 (1.703)	5,94 (0.234)	11,13 (0.438)
C–10–4	15,90 (0.626)	63,50 (2.500)	18,26 (0.718)	6,35 (0.250)	34,13 (1.343)	6,35 (0.250)	50,00 (1.968)	6,35 (0.250)	14,29 (0.562)

C-**-2 Aluminum Housings (Light Duty)

Housing	Ports 1 & 2	Part Number
C–10–2	3/8” BSPP	02-175462
	SAE 6	566151
C–16–2	3/4” BSPP	02-175463
	SAE 12	566149
C–20–2	1” BSPP	02-175464
	SAE 16	566409

Note: BSPP porting is designated by “B” in the model code
SAE porting is designated by ‘T” in the model code

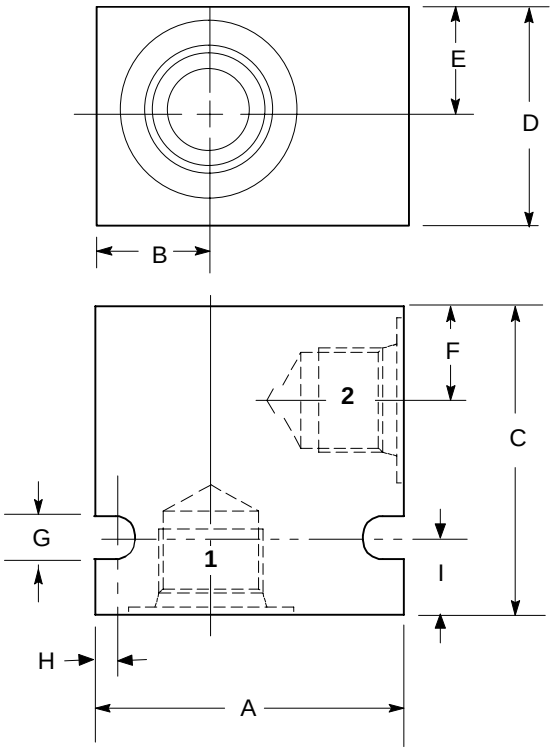

Cavity mm (inch)	A	B	C	D	E	F	G	H	I	Mass kg (lb.)
C-10-2	50,8 (2.00)	19,0 (0.75)	50,8 (2.00)	31,7 (1.25)	15,9 (0.62)	19,0 (0.75)	7,1 (0.28)	3,1 (0.12)	12,7 (0.50)	0,1 (0.35)
C-16-2	76,2 (3.0)	28,5 (1.12)	76,2 (3.00)	47,6 (1.87)	23,8 (0.94)	25,4 (1.00)	8,6 (0.34)	4,0 (0.16)	19,0 (0.75)	0,5 (1.21)
C-20-2	88,9 (3.5)	34,3 (1.35)	88,9 (3.50)	68,5 (2.70)	34,3 (1.35)	36,8 (1.45)	8,6 (0.34)	4,0 (0.16)	21,6 (0.85)	0,8 (1.90)

C-**-2 Aluminum Housings (Fatigue Rated)

Housing	Ports 1 & 2	Part Number
C–8–2	1/4” BSPP	02–160727
	3/8” BSPP	02–160728
	SAE 4	02–160730
	SAE 6	02–160731
	SAE 8	02–160732
C–10–2	1/4” BSPP	876702
	3/8” BSPP	876703
	SAE 6	876700
	SAE 8	876701
C–12–2(U)	1/2” BSPP	02–161116
	3/4” BSPP	02–161115
	SAE 10	02–160641
	SAE 12	02–160645
C–12–2	1/2” BSPP	02–161118
	3/4” BSPP	02–161117
	SAE 10	02–160640
	SAE 12	02–160644
C–16–2	1/2” BSPP	876716
	3/4” BSPP	876718
	SAE 10	876717
	SAE 12	566113
C–20–2	3/4” BSPP	876732
	1” BSPP	876734
	SAE 12	876733
	SAE 16	876735

Note: BSPP porting is designated by “G” in the model code
SAE porting is designated by either “‘T’ or ‘H’” in the model code

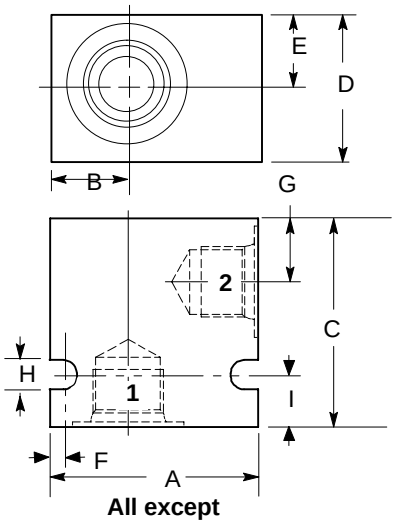

All except C–12–2(U)

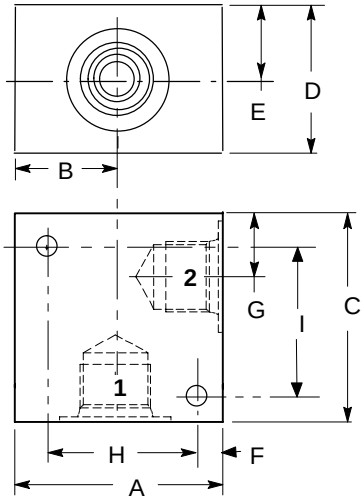

C–12–2(U)

Cavity mm (inch)	A	B	C	D	E	F	G	H	I	Mass kg (lb.)
C-8-2	50,8 (2.00)	19,0 (0.75)	51,0 (2.00)	38,1 (1.50)	19,0 (0.75)	3,4 (0.13)	15,5 (0.61)	7,1 (0.28)	12,7 (0.50)	0,2 (0.46)
C-10-2	63,5 (2.50)	25,4 (1.00)	63,5 (2.50)	50,8 (2.00)	25,4 (1.00)	9,5 (0.37)	20,8 (0.81)	7,1 (0.28)	19,0 (0.75)	0,4 (1.00)
C-12-2(U)	88,9 (3.50)	44,5 (1.75)	88,9 (3.50)	50,8 (2.00)	25,4 (1.00)	12,7 (0.50)	28,7 (1.13)	63,5 (2.50)	63,5 (2.50)	0,8 (1.96)
C-16-2	88,9 (3.50)	34,9 (1.37)	88,9 (3.50)	63,5 (2.50)	31,7 (1.25)	10,3 (0.40)	28,4 (1.11)	8,7 (0.34)	25,4 (1.00)	1,2 (2.75)
C-20-2	101,6 (4.00)	38,1 (1.50)	101,6 (4.00)	82,5 (3.25)	41,3 (1.62)	10,3 (0.40)	36,0 (1.41)	8,7 (0.34)	25,4 (1.00)	1,8 (4.00)

C-**-3 & 4 Aluminum Housings (Light Duty)

Housing	All Ports	Part Number
C–10–3	3/8” BSPP	02–173358
	SAE 6	566162
C–10–4	3/8” BSPP	02–179705
	SAE 6	566161

Note: BSPP is designated by “B” in model code
SAE is designated by “T” in model code

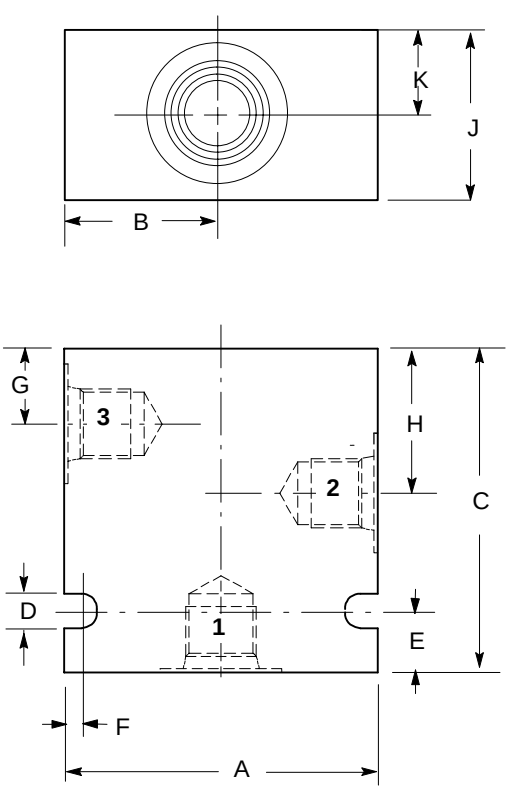

C--3**

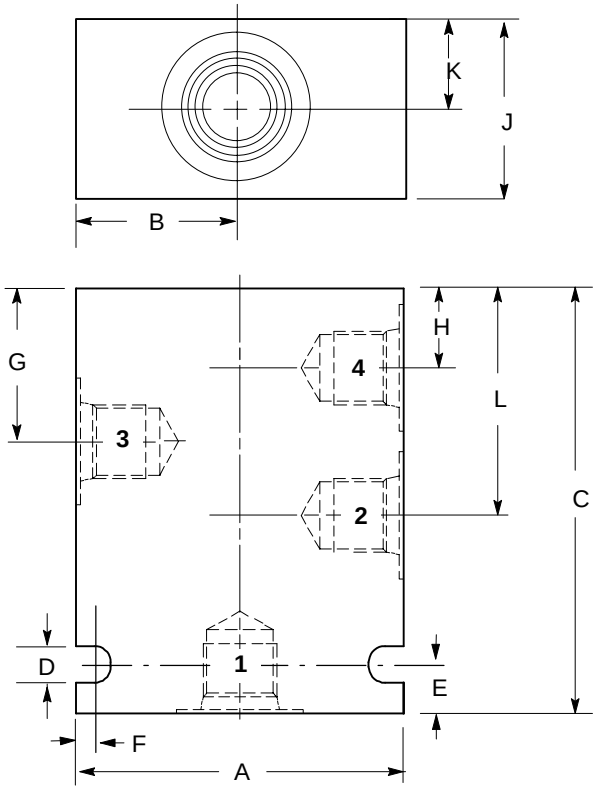

C--4**

Cavity mm (inch)	A	B	C	D	E	F	G	H	J	K	L	Mass kg (lb.)
C-10-3	63,5 (2.50)	31,7 (1.25)	66,6 (3.25)	7,1 (0.28)	12,7 (0.50)	3,1 (0.12)	19,0 (0.75)	34,9 (1.37)	31,7 (1.25)	15,8 (0.62)	–	0,3 (0.72)
C-10-4	63,5 (2.50)	31,7 (1.25)	82,5 (3.25)	7,1 (0.28)	9,5 (0.37)	3,1 (0.12)	34,9 (1.37)	19,0 (0.75)	31,7 (1.25)	15,8 (0.62)	50,8 (2.00)	0,3 (0.72)

C-**-3 & 4 Aluminum Housings (Fatigue Rated)

Housing	All Ports	Part Number	Housing	All Ports	Part Number
C–8–3	1/4” BSPP	02–160739	**C–8–4**	1/4” BSPP	02–160747
	3/8” BSPP	02–160740		3/8” BSPP	02–160748
	SAE 4	02–160741		SAE 6	02–160749
	SAE 6	02–160742		SAE 8	02–160750
C–10–3	1/4” BSPP	876705	**C–10–4**	1/4” BSPP	876709
	3/8” BSPP	876714		3/8” BSPP	876715
	SAE 6	876704		SAE 6	876708
	SAE 8	876711		SAE 8	876713

Note: BSPP porting is designated by either “B” or “G” in the model code
SAE porting is designated by either “H” or “T” in the model code

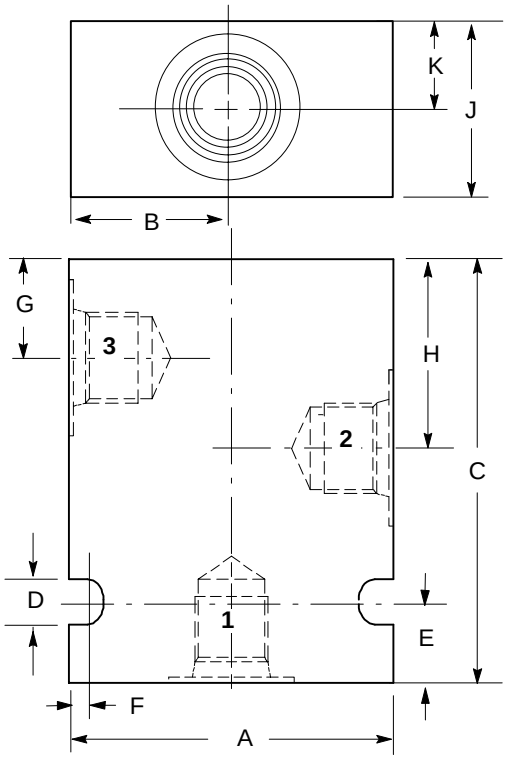

C--3**

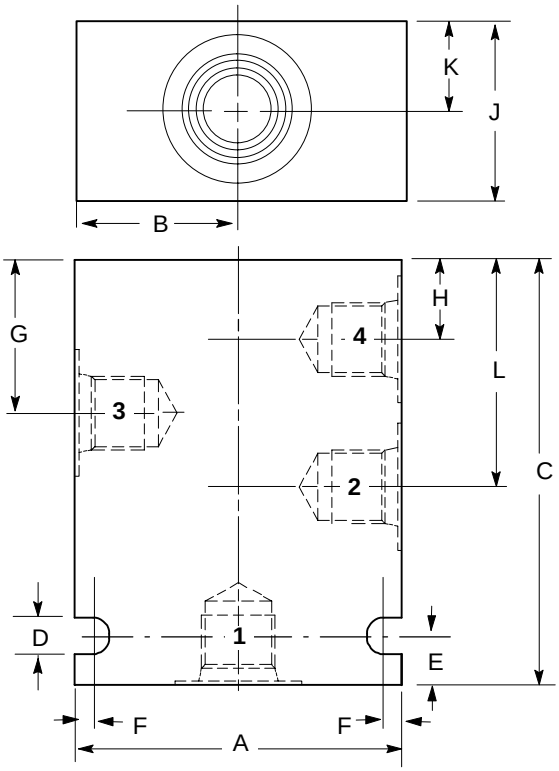

C--4**

Cavity mm (inch)	A	B	C	D	E	F	G	H	J	K	L	Mass kg (lb.)
C-8-3	63,5 (2.50)	31,8 (1.25)	82,6 (3.25)	7,1 (0.28)	13,0 (0.51)	3,4 (0.13)	15,5 (0.61)	29,8 (1.17)	38,1 (1.50)	19,0 (0.75)	_	0,4 (0.83)
C-10-3	76,2 (3.00)	38,1 (1.50)	88,9 (3.50)	7,1 (0.28)	19,0 (0.75)	9,5 (0.37)	20,8 (0.82)	36,6 (1.44)	50,8 (2.00)	25,4 (1.00)	_	0,7 (1.65)
C-8-4	63,5 (2.50)	31,8 (1.25)	82,6 (3.25)	7,1 (0.28)	9,6 (0.37)	6,7 (0.27)	29,8 (1.17)	15,5 (0.61)	38,1 (1.50)	19,0 (0.75)	44,1 (1.74)	1,2 (2.70)
C-10-4	76,2 (3.00)	38,1 (1.50)	88,9 (3.50)	7,1 (0.28)	12,7 (0.50)	9,5 (0.37)	36,6 (1.44)	20,8 (0.82)	50,8 (2.00)	25,4 (1.00)	52,5 (2.07)	0,9 (2.00)

8-Series Coils

Coil Dimensions

millimeter (inch)

"G"- DIN connector

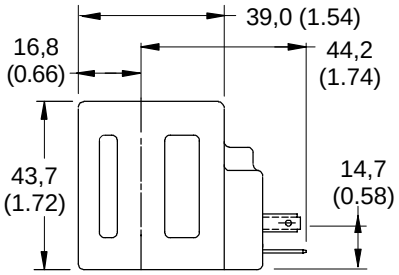

DIN 43650 connector for "G"style coil – 02–166796

"N"- Deutsch Type connector

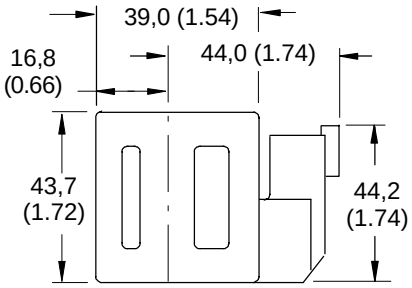

"P"- 1/2" NPT conduit

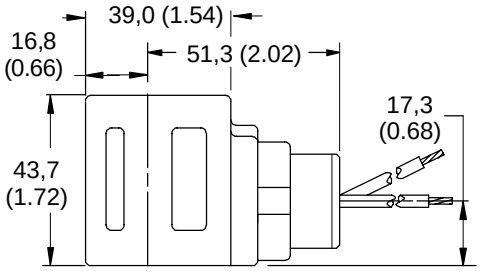

"Q" - Spade terminal

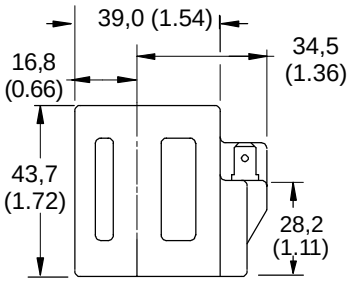

"W" 610 mm (24 inch) lead wire

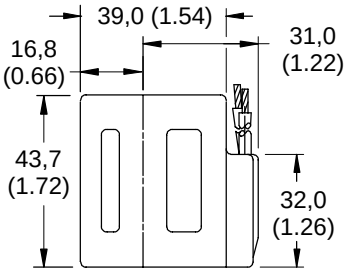

"Y" - AMP JR. connector

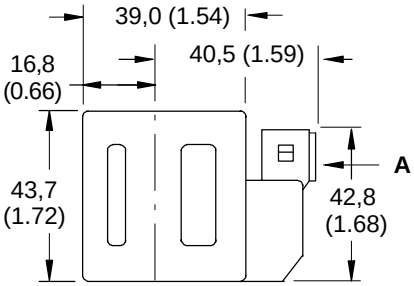

View A
Note: width - all configurations

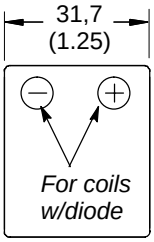

Voltage w/o diode	COIL PART NUMBERS					
	G Connector	N Connector	P Connector	Q Connector	W Connector	Y Connector
12 VDC	02–160690	02–160958	02–160684	02–160681	02–160678	02–178001
24 VDC	02–160691	02–160959	02–160685	02–160682	02–160679	02–178002
36 VDC	02–160692	02–160960	02–160686	02–160683	02–160680	02–178003
24 VAC	02–160702	N/A	02–160699	02–160696	02–160693	N/A
115 VAC	02–160703		02–160700	N/A	N/A	
220 VAC	02–160704		02–160701			
12 VDC*	02–178810	02–160953	N/A	02–178804	02–178802	02–160957
24 VDC*	02–178811	02–178812		02–178805	02–178803	02–178815

*optional arc suppression diode

Specifications

Standard Voltages	Amperes*	Lead Color
12 DC	1.32	red
24 DC	0.66	black
36 DC	0.44	blue
24 AC	0.73	orange
120 AC	0.15	yellow
240 AC	0.07	red/white

*Nominal voltage @ 25°C (77°F)

Duty Rating
Continuous from 85% to 110% of nominal voltage

Operating Temperature –100°C (212°F)
continuous @ nominal voltage

Lead Wires – 18 gauge, 610 mm (24" long), UL style 3173 CSA CL 1251 (meets SAE J1128 XLPE style SXL)

Wattage –All coils are nominally 16 watts @ 25°C (77°F)

Encapsulent –P.E.T.

Magnet Wire –U.L. class N, 200°C (392°F) NEMA pub. no. MW 1000, section MW 35–C (single)

Flyback diode (arc suppressor)–Maximum recurrent peak reverse voltage – 800 V (optional)

For other voltages and connectors contact a Vickers representative.

10, 12, 16, 20-Series Coils

Coil Dimensions

millimeter (inch)

"G"- DIN connector

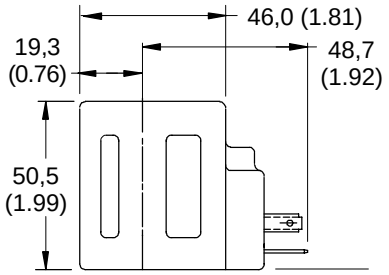

"N"- Deutsch Type connector

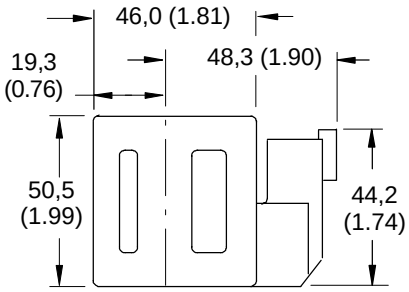

"P"- 1/2" NPT conduit

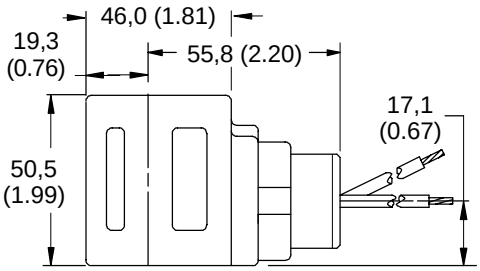

"Q" - Spade terminal

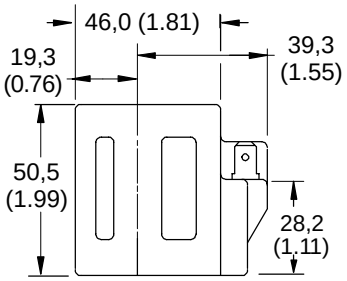

"W" 610 mm (24 inch) lead wire

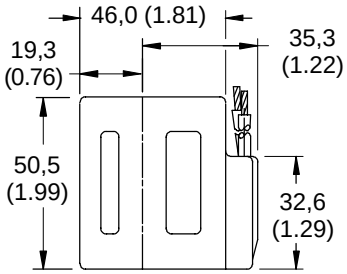

"Y" - AMP JR. connector

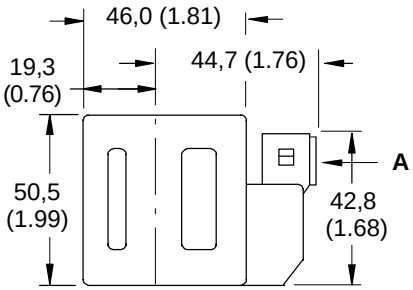

View A
Note: width - all configurations

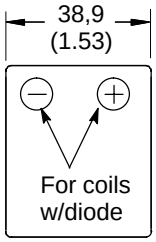

Voltage w/o diode	COIL PART NUMBERS					
	G Connector	N Connector	P Connector	Q Connector	W Connector	Y Connector
12 VDC	02–178086	02–178093	02–178078	02–178070	02–178063	02–178711
24 VDC	02–178087	02–178094	02–178079	02–178073	02–178065	02–178712
36 VDC	02–178089	02–178095	02–178080	02–178075	02–178066	02–178713
24 VAC	02–178112	N/A	02–178104	02–178103	02–178102	N/A
120 VAC	02–178114		02–178106	N/A	N/A	
240 VAC	02–178117		02–178109			
12 VDC*	02–178840	02–178842	N/A	02–178834	02–178832	02–178762
24 VDC*	02–178841	02–178843		02–178835	02–178833	02–178846

*optional arc suppression diode

Specifications

Standard Voltages	Amperes*	Lead Color
12 DC	1.66	red
24 DC	0.83	black
36 DC	0.55	blue
24 AC	0.83	orange
120 AC	0.17	yellow
240 AC	0.08	red/white

*Nominal voltage @ 25°C (77°F)

Duty Rating-Continuous from 85% to 110% of nominal voltage

Lead Wires – 18 gauge, 610 mm (24" long), UL style 3173 CSA CL 1251 (meets SAE J1128 XLPE style SXL)

Wattage –All coils are nominally 20 watts @ 25°C (77°F)

DIN 43650 connector (Size 8 thru 20 "G" coil only)

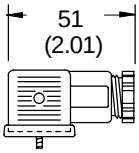

part number 02-166796

Encapsulent –P.E.T.

Magnet Wire –U.L. class N, 200°C (392°F) NEMA pub. no. MW 1000, section MW 35–C (single)

Flyback diode (arc suppressor)–Maximum recurrent peak reverse voltage – 800 V (optional)

Mando manual opcional

Dimensiones mm (in.)

Accionamiento manual “S” para las electroválvulas de cartucho para roscar, de dis posiciones

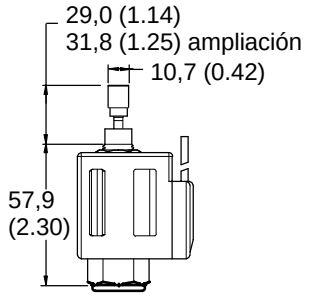

8-Series

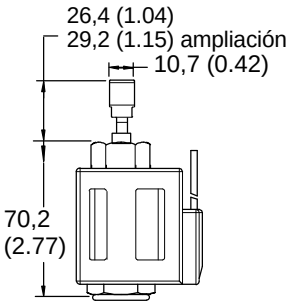

10,12,16,20-Series

Para accionar:

1 Girar el botón del accionamiento manual en el sentido horario hasta que se pare

2 Este botón permanecerá actuado hasta que se gire en el sentido antihorario

Para soltar:

1 Girar el botón del accionamiento manual en el sentido antihorario hasta que se pare

Accionamiento manual “P” para las electroválvulas tipo “empujar”, de dos posiciones

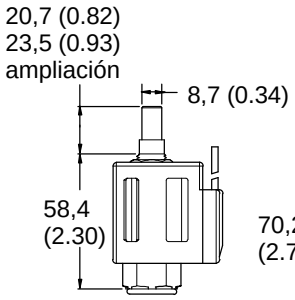

8-Series

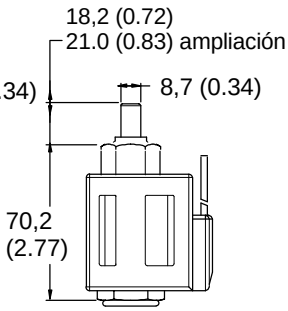

10,12,16,20-Series

Para accionar:

1 Push the override button to stop and hold

To release:

1 Remove pressure from the override button.

Los accionamientos manuales opcionales “P” y “S” están disponibles en los modelos siguientes:

SV3-10-OS-0-00	SV4-10-3S-0-00	SV3-20-OS-0-00	SV5-10-OP-0-00	SV3-12-OP-0-00	SV5- 8-OP-0-00
SV5-10-OS-0-00	SV3-12-OS-0-00	SV5- 8-OS-0-00	SV7-10-4P-0-00	SV3-16-OP-0-00	
SV7-10-4S-0-00	SV3-16-OS-0-00	SV3-10-OP-0-00	SV4-10-3P-0-00	SV3-20-OP-0-00	

Manual override “M” for two position, pull type solenoid valves

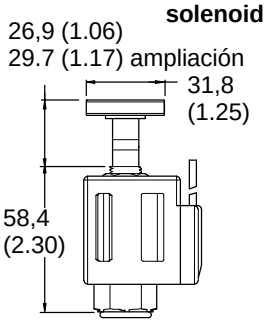

8-Series

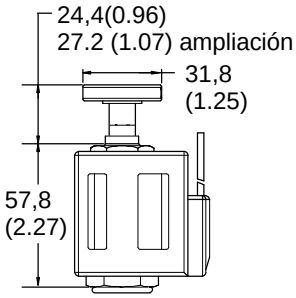

10,12,16,20-Series

Manual override “R” for cable type solenoid valves (not available on size 8 models)

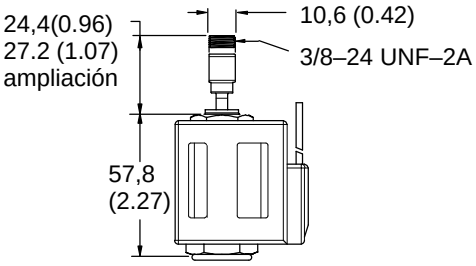

Para accionar:

1 Pull up knob until the override tooth is completely out of the detent base.

2 Turn the knob clockwise until the override tooth is resting securely on top of the detent base slot

To release:

1 Pull up knob slightly from surface.

2 Turn the knob clockwise until the override tooth is securely engaged in slot of the detent base

The manual override option is intended for emergency use, not for continuous duty operation.

Manual override “M & R” options are available on the following models:

SV1-10-3M-0-00	SV3-10-CM-0-00	SV4- 8-CM-0-00	SV1-10-CR-0-00	SV4-10-CR-0-00	SV3-12-CR-0-00
SV1-10-4M-0-00	SV4-10-4M-0-00	SV3-12-CM-0-00	SV2-10-4R-0-00	SV4-10-OR-0-00	SV1-16-CR-0-00
SV1-10-CM-0-00	SV4-10-CM-0-00	SV1-16-CM-0-00	SV2-10-CR-0-00	SV5-10-4R-0-00	SV2-20-CR-0-00
SV2-10-4M-0-00	SV4-10-OM-0-00	SV2-20-CM-0-00	SV3-10-4R-0-00	SV4- 8-OM-0-00	SV1- 8-4M-0-00
SV2-10-CM-0-00	SV5-10-4M-0-00	SV1-10-3R-0-00	SV3-10-CR-0-00	SV1- 8-3M-0-00	SV2- 8-4M-0-00
SV3-10-4M-0-00	SV5- 8-CM-0-00	SV1-10-4R-0-00	SV4-10-4R-0-00	SV4- 8-3M-0-00	

Manual Override Options

Dimensions
millimeter (inch)

Manual override “S” for two position, screw type solenoid valves

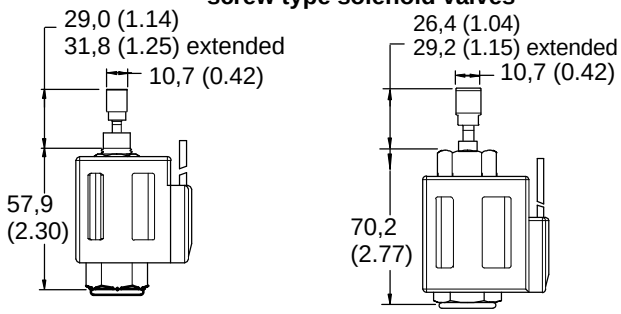

8-Series **10,12,16,20-Series**

To override:

1 Turn the override button clockwise until it stops.

2 The override button will remain activated until the override button is turned counterclockwise.

To release:

1 Turn the override button counterclockwise until it stops.

Manual override “P” for two position, push type solenoid valves

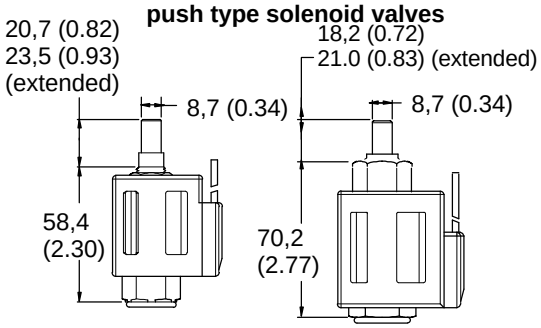

8-Series **10,12,16,20-Series**

To override:

1 Push the override button to stop and hold

To release:

1 Remove pressure from the override button.

Manual override “P” & “S” options are available on the following models:

SV3-10-OS-0-00	SV4-10-3S-0-00	SV3-20-OS-0-00	SV5-10-OP-0-00	SV3-12-OP-0-00	SV5- 8-OP-0-00
SV5-10-OS-0-00	SV3-12-OS-0-00	SV5- 8-OS-0-00	SV7-10-4P-0-00	SV3-16-OP-0-00	
SV7-10-4S-0-00	SV3-16-OS-0-00	SV3-10-OP-0-00	SV4-10-3P-0-00	SV3-20-OP-0-00	

Manual override “M” for two position, pull type solenoid valves

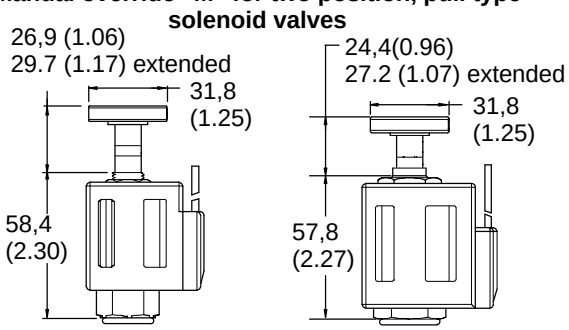

8-Series **10,12,16,20-Series**

To override:

1 Pull up knob until the override tooth is completely out of the detent base.

2 Turn the knob clockwise until the override tooth is resting securely on top of the detent base slot

To release:

1 Pull up knob slightly from surface.

2 Turn the knob clockwise until the override tooth is securely engaged in slot of the detent base

Manual override “R” for cable type solenoid valves (not available on size 8 models)

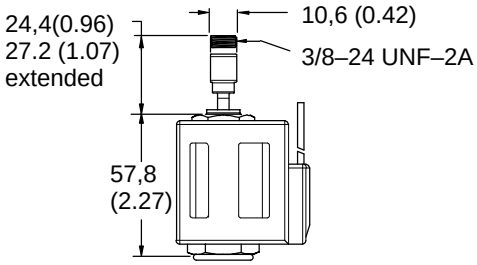

The manual override option is intended for emergency use, not for continuous duty operation.

Manual override “M & R” options are available on the following models:

SV1-10-3M-0-00	SV3-10-CM-0-00	SV4- 8-CM-0-00	SV1-10-CR-0-00	SV4-10-CR-0-00	SV3-12-CR-0-00
SV1-10-4M-0-00	SV4-10-4M-0-00	SV3-12-CM-0-00	SV2-10-4R-0-00	SV4-10-OR-0-00	SV1-16-CR-0-00
SV1-10-CM-0-00	SV4-10-CM-0-00	SV1-16-CM-0-00	SV2-10-CR-0-00	SV5-10-4R-0-00	SV2-20-CR-0-00
SV2-10-4M-0-00	SV4-10-OM-0-00	SV2-20-CM-0-00	SV3-10-4R-0-00	SV4- 8-OM-0-00	SV1- 8-4M-0-00
SV2-10-CM-0-00	SV5-10-4M-0-00	SV1-10-3R-0-00	SV3-10-CR-0-00	SV1- 8-3M-0-00	SV2- 8-4M-0-00
SV3-10-4M-0-00	SV5- 8-CM-0-00	SV1-10-4R-0-00	SV4-10-4R-0-00	SV4- 8-3M-0-00	

Supporting Products

Roughing Tools

Roughers are basically step drills which leave .030” per cutting diameter and .015” above all radii for the finishing reamer, with an additional .015” depth in the cavity bottom as clearance.

The roughing tool is necessary to prepare the cavity for the finishing reamer, which has not been designed for the primary forming or bottom cutting.

We offer two types of roughers, one for aluminum and one for steel. The aluminum rougher is manufactured with a 4-facet point and polished flutes. The steel rougher is supplied with a standard drill point. Both types will work in either material; however, longevity of an aluminum tool will be sacrificed when used continually in steel.

Cavity	Material	Model Code	Assembly Number
2–Way			
C–8–2	Aluminum / Steel	RT1–8–2–AS–8028	02–165580
C–10–2	Aluminum	RT–10–2–A–8030	889509
C–12–2	Aluminum / Steel	RT–12–2–AS–8213	02–160625
C–16–2	Aluminum	RT–16–2–A–8031	889515
C–20–2	Aluminum	RT–20–2–A–8032	565822
3–Way			
C–8–3	Aluminum / Steel	RT1–8–3–AS–8291	02–162384
C–10–3	Aluminum	RT–10–3–A–8038	889511
4–Way			
C–8–4	Aluminum / Steel	RT–8–4–AS–8292	02–172803
C–10–4	Aluminum	RT–10–4–A–8072	889513

Finishing Tools

These finishing tools have been designed as precision reamers for finishing operations only. They are not intended for primary forming or bottom cutting operations. Vickers recommends that a finishing tool only be used in a properly roughed hole. Failure to conform to this practice will produce unsatisfactory size and finishes and possibly break the tool.

Cavity	Material	Model Code	Assembly Number
2–Way			
C–8–2	Aluminum / Steel	FT1–8–2–AS–8070	02–112933
C–10–2	Aluminum / Steel	FT–10–2–AS–8048	566235
C–12–2	Aluminum / Steel	FT–12–2–AS–8214	02–162162
C–16–2	Aluminum / Steel	FT–16–2–AS–8078	565832
C–20–2	Aluminum / Steel	FT–20–2–AS–8079	565833
3–Way			
C–8–3	Aluminum / Steel	FT–8–3–AS–8295	02–171292
C–10–3	Aluminum / Steel	FT–10–3–AS–8050	565834
4–Way			
C–8–4	Aluminum / Steel	FT–8–4–AS–8296	02–171291
C–10–4	Aluminum / Steel	FT–10–4–AS–8052	565838
C–16–4	Aluminum / Steel	FT–16–4–AS–8084	566571
C–20–4	Aluminum / Steel	FT–20–4–AS–8085	889360

Finishing Form Tools Speed & Feed for Aluminum 6061–T6 (T651)

This information is recommended as a good starting point. Speeds and/or feeds may be increased or decreased depending on actual machining conditions.

NOTE: Finish form tools may require 1/2 to 1–1/2 second dwell to obtain necessary finish.

CNC MACHINE TOOL			BRIDGEPORT / LAGUN TYPE MACHINES		
Tool Size	RPM	IPM	Tool Size	RPM	IPM
C–10–2	600	4	C–10–2	800–1000	6–5
C–10–3			C–10–3		
C–10–4			C–10–4		
C–16–2			C–16–2	250	2 1/2
C–16–3			C–16–3		
C–16–4			C–16–4	250	2 1/2
C–20–2	500	3	C–20–2	250	2 1/2

Fluid Cleanliness

The recommended cleanliness code for the valves in this publication is 18**/16/13.**

Proper fluid condition is essential for long and satisfactory life of hydraulic components and systems. Hydraulic fluid must have the correct balance of cleanliness, materials, and additives for protection against wear of components, elevated viscosity, and inclusion of air.

Essential information on the correct methods for treating hydraulic fluid is included in Vickers publication 561 “Vickers Guide to Systemic Contamination Control” available from your local Vickers distributor or by contacting Vickers, Incorporated. Recommendations on filtration and the selection of products to control fluid condition are included in 561.

Solenoid valve miscellaneous parts

Normally closed nut	
8 Series	02–170821
10,12, 16, 20 Series	565558
Normally open nut	
8, 10,12, 16, 20 Series	565559
Spacer for SV9	02-179226

Note: When a solenoid valve is ordered as a cartridge only, the nut is included.

Index

MODEL	DESCRIPTION	TYPICAL APPLICATION PRESSURE bar (psi)	RATED FLOW l/min (USgpm)	PAGE
SV1–8–3/3M spool type	3-way, 2-position	210 (3000)	11 (3)	38
SV1–8–4/4M spool type	4-way, 2-position	210 (3000)	11 (3)	46
SV2–8–4/4M spool type	4-way, 2-position	210 (3000)	13 (4)	48
SV4–8–3/3M spool type	3-way, 2-position	210 (3000)	13 (4)	40
SV4–8–C/CM spool type	2-way, 2-position, Normally Closed	210 (3000)	11 (3)	18
SV4–8–O/OM spool type	2-way, 2-position, Normally Open	210 (3000)	13 (4)	34
SV5–8–C/CM poppet type	2-way, 2-position, Normally Closed	210 (3000)	23 (6)	4
SV5–8–O/OP/OS poppet type	2-way, 2-position, Normally Open	210 (3000)	23 (6)	22
SV1–10–3/3M/3R spool type	3-way, 2-position	210 (3000)	23 (6)	42
SV1–10–4/4M/4R spool type	4-way, 2-position	210 (3000)	23 (6)	50
SV1–10–C/CM/CR poppet type	2-way, 2-position, Normally Closed	210 (3000)	45 (12)	6
SV2–10–4/4M/4R spool type	4-way, 2-position	210 (3000)	23 (6)	50
SV2–10–C/CM/CR poppet type	2-way, 2-position, Normally Closed	210 (3000)	23 (6)	8
SV3–10–4/4M/4R spool type	4-way, 2-position	210 (3000)	23 (6)	54
SV3–10–C/CM/CR poppet type	2-way, 2-position, Normally Closed	210 (3000)	45 (12)	10
SV3–10–O/OP/OS poppet type	2-way, 2-position, Normally Open	210 (3000)	23 (6)	24
SV4–10–3/3P/3S spool type	3-way, 2-position	210 (3000)	23 (6)	44
SV4–10–4/4M/4R spool type	4-way, 2-position	210 (3000)	23 (6)	56
SV4–10–C/CM/CR spool type	2-way, 2-position, Normally Closed	210 (3000)	23 (6)	20
SV4–10–O/OM/OR spool type	2-way, 2-position, Normally Open	210 (3000)	23 (6)	36
SV5–10–4/4M/4R spool type	4-way, 2-position	210 (3000)	23 (6)	58
SV5–10–O/OP/OS poppet type	2-way, 2-position, Normally Open	210 (3000)	45 (12)	26
SV7–10–4/4P/4S	4-way, 2-position	210 (3000)	17 (5)	60
SV9–10–A	4-way, 3-position	210 (3000)	11 (3)	62
SV9–10–B	4-way, 3-position	210 (3000)	11 (3)	64
SV9–10–D	4-way, 3-position	210 (3000)	11 (3)	66
SV9–10–E	4-way, 3-position	210 (3000)	11 (3)	68
SV9–10–F	4-way, 3-position	210 (3000)	11 (3)	70
SV9–10–G	4-way, 3-position	210 (3000)	11 (3)	72
SV3–12–C/CM/CR poppet type	2-way, 2-position, Normally Closed	210 (3000)	114 (30)	12
SV3–12–O/OP/OS poppet type	2-way, 2-position, Normally Open	210 (3000)	114 (30)	28
SV1–16–C/CM/CR poppet type	2-way, 2-position, Normally Closed	210 (3000)	132 (35)	14
SV3–16–O/OP/OS poppet type	2-way, 2-position, Normally Open	210 (3000)	132 (35)	30
SV2–20–C/CM/CR poppet type	2-way, 2-position, Normally Closed	210 (3000)	227 (60)	16
SV3–20–O/OP/OS poppet type	2-way, 2-position, Normally Open	210 (3000)	227 (60)	32
C-**-2 (U)	Standard Cavity Dimensions			74
C-**-3/4	Standard Cavity Dimensions			75
C-**-2	Aluminum Light Duty Housings, Part Numbers, Dimensions & Weights			76
C-**-2	Aluminum Fatigue Rated Housings, Part Numbers, Dimensions & Weights			77
C-**-3/4	Aluminum Light Duty Housings, Part Numbers, Dimensions & Weights			78
C-**-3/4	Aluminum Fatigue Rated Housings, Part Numbers, Dimensions & Weights			79
Coils	8-Series			80
Coils	10,12,16,20-Series			81
Manual Override Option	P, S, M and R			83
Form Tools	Roughing & Finishing			84
Application Data	Solenoid Valve Miscellaneous Parts			85

Eaton Hydraulics
15151 Highway 5
Eden Prairie, MN 55344
Telephone: 612 937-7254
Fax: 612 937-7130
www.eatonhydraulics.com

46 New Lane, Havant
Hampshire PO9 2NB
England
Telephone: (44) 170-548-6451
Fax: (44) 170-548-7110