PUMP DATA	
DISPLACEMENT	44,0 ccm
MAX. PRESSURE	SEE VALVE DATA
SPEED RATE 500 TO 2400 min¯1	
MAX. INPUT SHAFT TORQUE 272 Nm	
ROTATION	ANTI CLOCKWISE

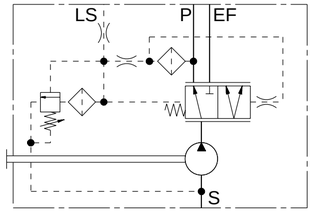

PUMP WITH LOAD SENSING PRIORITY VALVE
AND DYNAMIC LOAD SENSING SIGNAL
AND PILOT PRIORITY PORT RELIEF VALVE 130 bar
MAX. PRESSURE AT EXCESS PORT (EF) 195 bar
CONTROL PRESSURE 10.4 bar

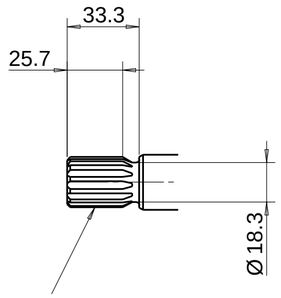

SAE INVOLUTE SPLINE
13 TEETH - 16/32 PITCH
FLAT ROOT SIDE FIT
MAJOR DIA 21.67-21.79
MINOR DIA 18.631 MAX.

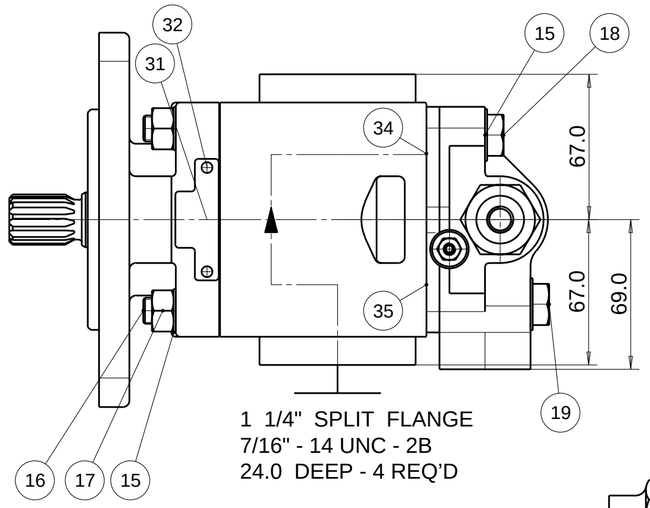

1 1/4" SPLIT FLANGE
7/16" - 14 UNC - 2B
24.0 DEEP - 4 REQ'D

VIEW X

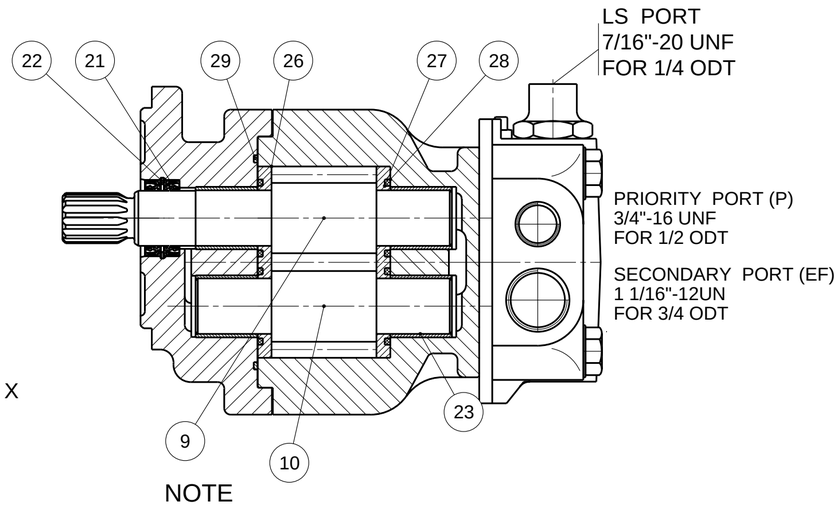

NOTE

1. FOR ASSEMBLY INSTRUCTIONS SEE DWG. NO. "620-B1" "PGP620 PUMP ASSEMBLY INSTRUCTIONS".
2. NAMEPLATE LOCATION MAY VARY DUE TO DESIGN CRITERIA OR MANUFACTURING LOCATION. STICKER OPTIONAL FOR #31 & #32

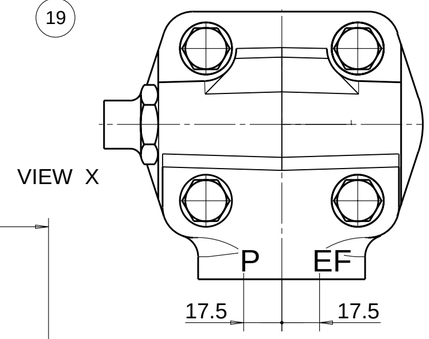

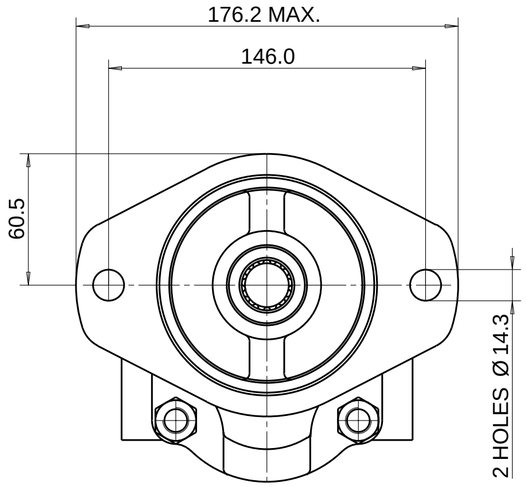

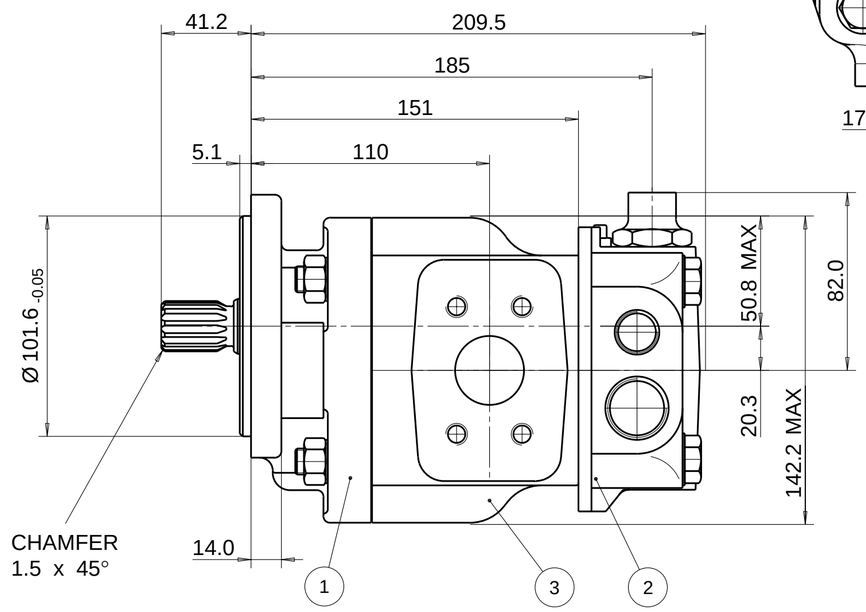

ITEM	PART NO	REQD		ITEM	PART NO	REQD	
28	8682-015-00Q	2	SEAL. ELEM.	36			
27	8682-016-00L	2	SEAL. ENERG.	35	9313-022-00A	1	O-RING
26	8682-058-00M	2	BAL. PLATE	34	9313-024-00W	1	O-RING
25				33			
24				32	391 1432 004	2	SCREW. DR.
23	391 0482 237	4	BUSH	31	391 2183 227	1	NAMEPLATE
22	9211-530-006	1	CIRCLIP	30			
21	8682-019-00Z	2	SEAL. LIP	29	9312-641-004	1	SEAL. SECT.

ITEM	PART NO	REQ'D	DESCRIPTION
20			
19	9112-407-00V	2	CAPSCREW (65 MM)
18	9112-403-00H	2	CAPSCREW (45 MM)
17	391 1451 149	4	M12 NUT
16	8682-007-00M	4	M12 SCREW
15	9222-575-009	8	WASHER
14			
13			
12			
11			
10	702 2744 000	1	DRIVEN GEAR
9	702 1144 400	1	DRIVE GEAR
8			
7			
6			
5			
4			
3	2PRB044-10S4B10	1	BODY
2	350 9711 029	1	CVP 100
1	2PRF02S1R	1	FLANGE

WITH EXCEPTION OF DRIVE SHAFT, FLANGE SPIGOT AND MTG. FACE
PLUS AREAS AROUND PORTS, ALL SURFACES ARE PAINTED
BLACK ZSS - A1 (AA-O-05.2)

THIRD ANGLE PROJECTION

EXP NO.

FIRST USED
11 - 09 - 606

42903

SYM.	REVISIONS
C2	BUSH POS. #23 3910482237 WAS 8682-018-00C
C1	REDRAWN
	02SEP11 JS 11-09-606

THIS DOCUMENT CONTAINS INFORMATION THAT IS CONFIDENTIAL AND PROPRIETARY TO PARKER-HANNIFIN CORPORATION ("PARKER"). THIS DOCUMENT IS FURNISHED ON THE UNTERSTANDING THAT THE DOCUMENT AND THE INFORMATION IT CONTAINS WILL NOT BE COPIED OR DISCLOSED TO OTHERS OR USED FOR ANY PURPOSE OTHER THAN CONDUCTING BUSINESS WITH PARKER, AND WILL BE RETURNED AND ALL FURTHER USE DISCONTINUED UPON REQUEST BY PARKER. ALL RIGHTS RESERVED.

PGP620A0440AD1H3MS4B1LZAY

Parker Pump & Motor Division Chemnitz

MATERIAL

H.E.-STD:

ADM CTR P
REV DTE 02SEP11
WT 16.1 kg

DIMENSIONS ARE MM

DR.BY	DATE	CH.BY	DATE	SCALE
JS	02SEP11	RP	02SEP11	1/2

42903

© 2011 Parker Hannifin Corporation