SV2-20-C/CM/CR - Solenoid valve

Poppet type, normally closed solenoid valve (free reverse flow)
227 L/min (60 USgpm) • 210 bar (3000 psi)

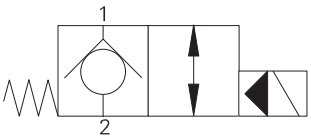

Operation

In the de-energized position the valve blocks flow from port 2 to 1 and free flow is allowed from port 1 to 2.

When the solenoid is energized the pilot poppet is pulled off the seat allowing the valve to open in both directions.

Features

Hardened and ground working parts. Lapped seat for low leakage. IP69K Tough coil compatibility. Continuously rated. Compact design with low pressure drop.

Sectional view

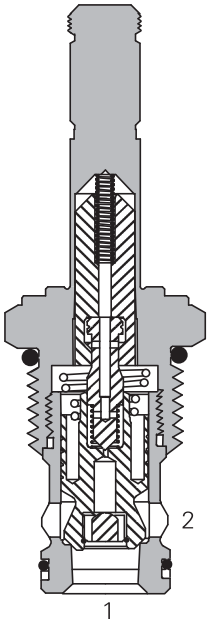

Performance data

Ratings and specifications

Performance data is typical with fluid at 21,8 cST (105 SUS) and 49°C (120°F)	
Typical application pressure (all ports)	210 bar (3000 psi)
Cartridge fatigue pressure (infinite life)	210 bar (3000 psi)
Rated flow	227 L/min (60 USgpm)
Internal leakage, port 2 to port 1	less than 5 drops/min, max @ 210 bar (3000 psi)
Temperature range	-40° to 120°C (-40° to 248°F)
Coil duty	Continuous from 85% to 110% of nominal voltage
Cavity	C-20-2
Fluids	All general purpose hydraulic fluids such as: MIL-H-5606, SAE 10, SAE 20 etc.
Filtration	Cleanliness code 18/**16/13**
Housing material (standard)	Aluminum
Weight including coil	1,2 kg (2.70 lbs)
Seal kit	889615 (Buna-N), 889619 (Viton®)

Viton is a registered trademark of E.I. DuPont

Description

This is a 2-way, 2-position, poppet type, pilot operated, normally closed solenoid valve. This valve is used in applications requiring low leakage, such as load holding applications or as a general purpose diverter or dump valve.

Pressure drop

Cartridge only

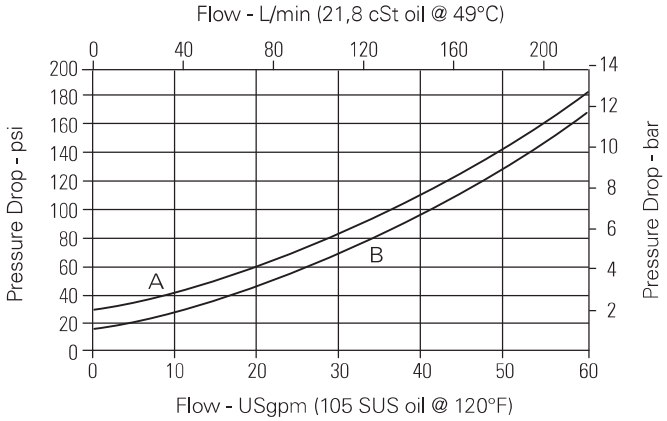

A - Port 1 to port 2 de-energized
B - Port 2 to port 1 energized

Where measurements are critical request certified drawings. We reserve the right to change specifications without notice.

SV2-20-C/CM/CR - Solenoid valve

Poppet type, normally closed solenoid valve (free reverse flow)
227 L/min (60 USgpm) • 210 bar (3000 psi)

Model code

SV2 – 20 (V) – C (*) – *** – **** * – 00

1 2 3 4 5 6 7 8 9

1 Function
SV2 - Solenoid valve

2 Size
20 - 20 size

3 Seal material
Blank - Buna-N
V - Viton®

4 Style
C - Normally closed

5 Manual override option
Blank - No manual override
M - Knob type
R - Cable type

For valve dimensions with manual override option installed see page A-980.

6 Port size

Code	Port size	Housing number
0	Cartridge only	
8B	1" BSPP	02-175464*
16T	SAE 16	566409*
6G	3/4" BSPP	876732
8G	1" BSPP	876734
12H	SAE 12	876733
16H	SAE 16	876735

*Light duty housing.
See section J for housing details.

7 Voltage rating
00 - No coil
12D - 12VDC
24D - 24VDC
36D - 36VDC
24A - 24VAC
115A - 115VAC
230A - 230VAC
12B - 12VDC/w diode*
24B - 24VDC/w diode*

*Optional arc suppression diode.

8 Connector types
Blank - No coil
G - ISO 4400 DIN 43650
Q - Spade terminals
W - Flying lead
N - Deutsch (DC only)
Y - Amp JR (DC only)
D - Metripack 150 male (DC only)
J - Metripack 280 male (DC only)

For coil part numbers and dimensions see section C.

9 Special features
00 - None

(Only required if valve has special features, omitted if "00".)

Dimensions
mm (inch)

Cartridge only

Torque cartridge in aluminum housing
128-155 Nm (95-115 ft lbs)

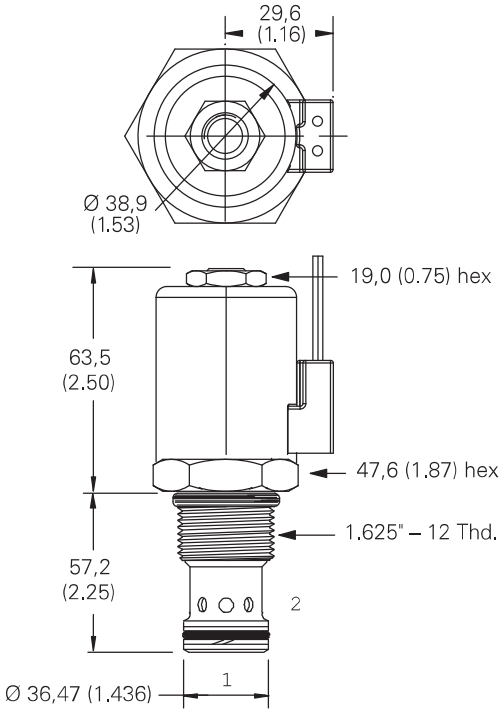

Note: When solenoid valve is ordered as cartridge only, coil nut is included.

Installation drawing

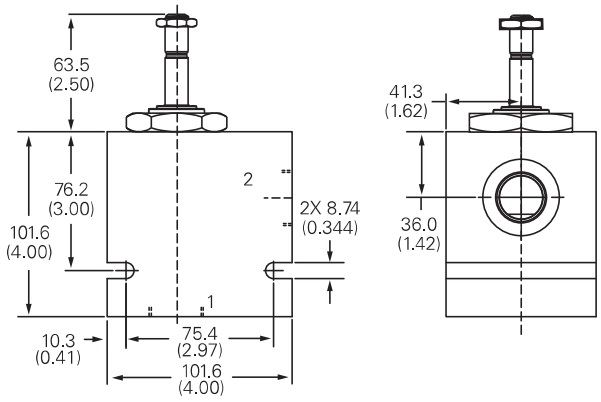

Note: Use J series, 23 W coils with this solenoid valve.

⚠ Warning
Maintain 5-8 Nm (4-6 ft lbs) maximum torque on valve tube nut.

Over tightening may cause valve failure.

Where measurements are critical request certified drawings. We reserve the right to change specifications without notice.