Model:085
Chapter 6 Winch

8186502
Winch LK006 EU cpl.

8186502 - Winch LK006 EU cpl.

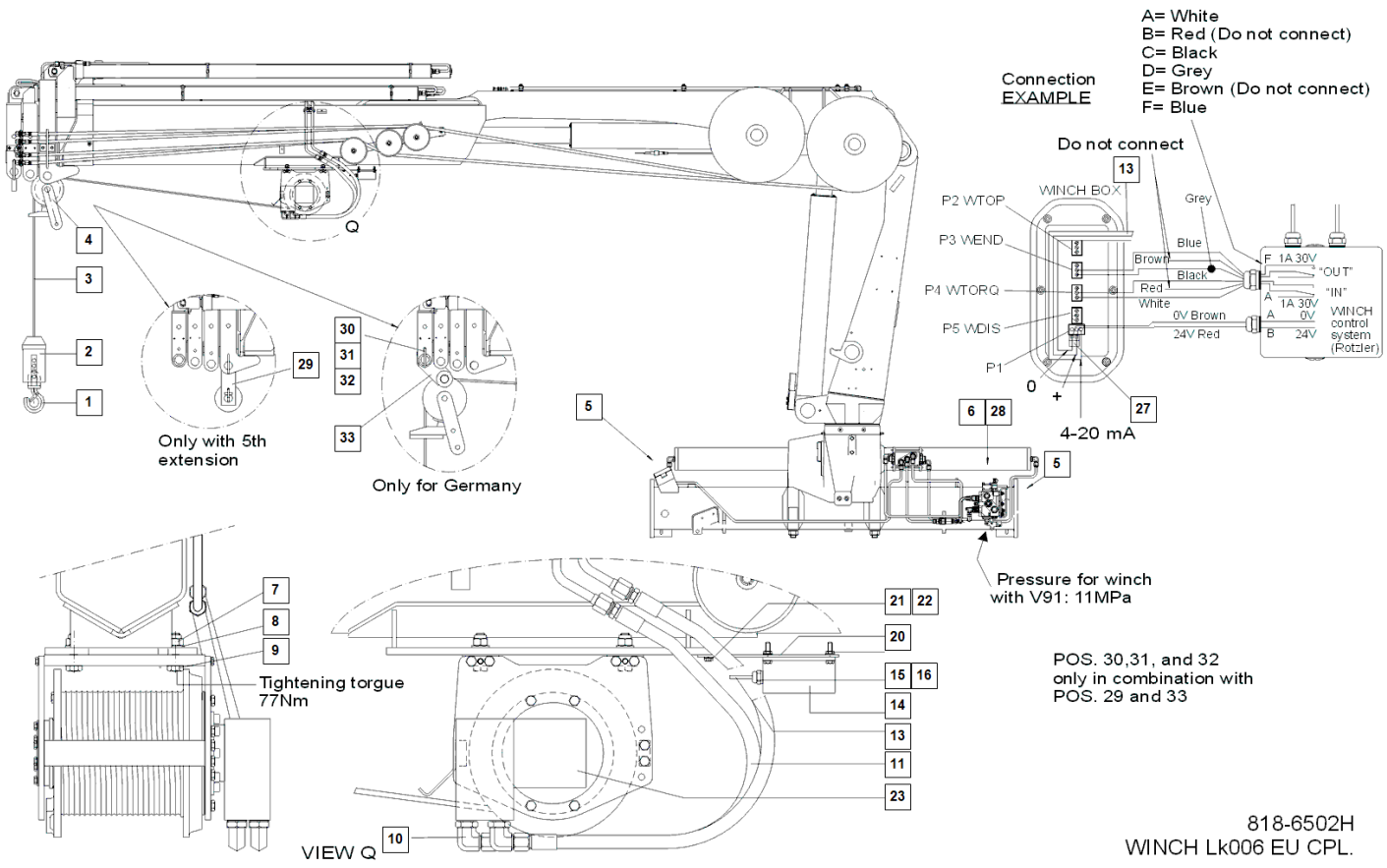

Pos	Part No	Description	Quantity
1	9840851	HOOK 20KN	1
2	9848134	CABLE WEIGHT	1
3	9840737	WINCH CABLE RD.7 - 37m	1
4	9840702	SHEAVE HOLDER	1
5	3552608	CONTROL SIGN	2
6	9827544	SPOOL 84A	1
6	3911993	SPOOL DM4	1
7	9953523	PT HEX NUT M12-A3P	4
8	9914129	WASHER B13-A3P	4
9	9924361	BOLT M12X45-A3P	4
10	9821449	ANGLE COUPLING 1/2"- RD.12	2
11	9824880	HP.HOSE RD.10-3/8" LG.600	2
13	8431493	CABLE PUR-BLACK 3X0.75	1
14	3602851	ELECTRONIC BOX(WINCH)	1
15	9828010	CABLE SWIVEL NUT PG 9	5
16	9921265	O-RING	5
17	9923926	BOLT.M6X25-A2P	4
18	9903844	WASHER B6.4-A2P	4
19	9929410	PT HEX NUT M6-A2P	4
20	8178348	PLATE	1
21	9900357	BOLT.M6X16-A2P	3
22	9904115	SPRING WASHER B6.1-A2P	3
23	9840508	WINCH LK006 EU	1
25	3921808	SPOOL	1
25	9830596	SPOOL 02A	1
27	9836632	EXTRA CONNECTION PLINTH	1
28	3903141	RELIEF VALVE	1
29	4483766	WINCH GUIDE	1
30	8494312	QUICK RELEASE PIN	1
31	8563870	NUT B-M36-A3P	1
32	9975501	PIN	1
33	4477316	WINCH BRACKET	1